University of Huddersfield

University of Huddersfield Repository

Adesta, Erry Yulian Triblas

A reference model for extended enterprise

Original Citation

Adesta, Erry Yulian Triblas (2002) A reference model for extended enterprise. Doctoral thesis, University of Huddersfield.

This version is available at https://eprints.hud.ac.uk/id/eprint/6714/

The University Repository is a digital collection of the research output of the University, available on Open Access. Copyright and Moral Rights for the items on this site are retained by the individual author and/or other copyright owners. Users may access full items free of charge; copies of full text items generally can be reproduced, displayed or performed and given to third parties in any format or medium for personal research or study, educational or not-for-profit purposes without prior permission or charge, provided:

- The authors, title and full bibliographic details is credited in any copy;
- A hyperlink and/or URL is included for the original metadata page; and
- The content is not changed in any way.

For more information, including our policy and submission procedure, please contact the Repository Team at: E.mailbox@hud.ac.uk.

http://eprints.hud.ac.uk/

A REFERENCE MODEL FOR EXTENDED ENTERPRISE

ERRY YULIAN TRIBLAS ADESTA

A thesis submitted to the University of Huddersfield
in partial fulfilment of the requirements for
the degree of Doctor of Philosophy

The University of Huddersfield

May 2002

ACKNOWLEDGEMENT

This research has been made possible by funding provided by the Engineering Education Development Project (EEDP) under the Ministry of National Education of Republic of Indonesia to whom I address my sincere gratitude.

I wish to thank Dr. Phil Kelly, my first supervisor and the Director of Studies, who has given me full guidance and support both academically and personally throughout the duration of this research. I am also indebted to Professor David Little, my second supervisor, who has shown me his professional guidance and support through the detailed preparation of this thesis.

My gratitude is due to Mr. Alan Mason, Managing Director (CEO) and Mr. Len Widdowson, Technical Director, both of Alan Group Limited, West Sussex, England for their full support by providing case study materials for this research. I thank Mr. John Hopkins of Northbay Consultant Limited, London, England who has given me his professional advice on IT for business and manufacturing implementation. Thanks are also due to Mr. Andi Karmandia, CAD/CAM Manager and Mr. Harry Fadillah, Computing Facility and Network Systems Manager of the then PT IPTN (now PT Dirgantara Indonesia), Bandung, Indonesia. Finally, I also wish to thank Mr. Erison Hex Octavian, SAP Senior Project Manager of Riau Andalan Pulp and Paper, Tbk., Riau, Indonesia for providing me with case materials. I also wish to thank Universitas Tarumanagara for giving me study leave to read for a PhD.

Last of all, to my beloved wife Yana and my three sons, Fajar, Fadhli and Fayez please forgive me for my long absence from our family life and this is dedicated to you all.

ABSTRACT

In today's highly competitive, volatile and increasingly global manufacturing environment, manufacturing companies are increasingly aware of the need for agility and effectiveness at the supply-chain level, rather than simply at company level. Business Process Re-engineering and the resulting emphasis on core competence has influenced a move towards de-centralisation, flatter organisation structures and increased use of "outsourcing". It has been said that it is now supply-chain versus supply-chain and that this poses both opportunity and threat for SMEs.

While some work has been done in relation to developing the concept of integrated supply-chains, relatively little has been published with respect to the concept of "Extended Enterprise (EE)", the "highest" level of inter-enterprise integration.

This thesis provides a thorough review of literature with respect to supply-chain integration and Extended Enterprise. Current practice is evaluated on the basis of the literature review and an analysis of a questionnaire and some Case Study companies.

A detailed description of Extended Enterprise is provided and a conceptual reference model is developed, with the aim of providing a strategic planning tool, which will help organisations to identify the extent to which they operate as part of an EE. The model is intended also to help organisations in their evolution towards more effective operation within EE.

One of the key characteristics/enablers of EE is stated as the existence of an organisational structure, which supports the effective identification, rationalisation and deployment of core competence within an EE. An approach based upon the concept of a "**Process Breakdown Structure**" is introduced and is evaluated in the context of a Case Study Company.

The major contribution to knowledge lies in the bringing together of concepts from Supply-Chain Management, Strategic Planning and Management, Concurrent Engineering, Project/Programme Management, CIM and Human Resource Management, into a reference model for EE. Contribution at a more detailed level is provided by the development and illustration of an organisational structure based on a Project/Programme Management approach that has the potential to support the effective identification, rationalisation and deployment of core competence across EE.

Recommendations for further work include long-term adoption and evaluation of the approach by one of the Case Companies as part of its planned international expansion.

CONTENTS

ACKNOWLEDGEMENT i

ABSTRACT ii

Chapter One - INTRODUCTION

1.1. Background 1

1.2. Research Hypotheses 9

1.3. Research Objectives 11

1.4. Research Methodology 11

1.5. Research Deliverables 12

1.6. Structure of the Thesis 13

Chapter Two - REVIEW OF PUBLISHED RESEARCH

2.1. Introduction 15

2.2. The Evolution of Computer Integrated Manufacturing (CIM) to Support Enterprise Integration (EI) 17

2.3. Enterprise Integration 24

2.3.1. Introduction to Enterprise Integration (EI) 24

2.3.2. Enterprise-Wide Integration (EWI) 26

2.4. The Evolution of Manufacturing Management 27

2.4.1. Just In Time (JIT) Manufacturing 27

2.4.2. Business Process Re-engineering (BPR) 28

2.4.3. Evolution of Enterprise Resource Planning (ERP) 30

2.4.4. The Role of Concurrent Engineering (CE) within CIM 32

2.4.5. Supply-Chain Management (SCM) 35

2.4.6. ICT enabled Supply-chain Integration 37

2.4.7. Extended Enterprise 39

2.5. Key Issues for EE drawn from Published Research 39

Chapter Three - REVIEW AND ANALYSIS OF CURRENT PRACTICE

3.1. Introduction 43
3.2. Questionnaire Analysis 45
3.3. The Interviews 67
3.4. Case Companies 69
3.5. Key Issues for EE from questionnaire and Case Companies 84

Chapter Four - DEVELOPMENT OF THE REFERENCE MODEL

4.1. Introduction 90
4.2. The Process of Building-up EE Reference Model 90
4.3. Extended Enterprise Definition and Characteristics 93
4.3.1. Development of Reference Model 97
4.3.2. Small to Medium Enterprise (SME) Networks 100
4.4. The Formation of EE Reference Model 101
4.4.1. The Needs of the Extended Enterprise 102
4.4.1.1. Agility 102
4.4.1.2. Goal Integration 105
4.4.1.3. Core Competence 107
4.4.2. The Criteria of the Extended Enterprise 110
4.4.3. The Resources of the Extended Enterprise 115
4.5. CIM as the Spine for Effective Operation of Extended Enterprise 125
4.6. CIM Methodology 127
4.7. CIM Reference Models 128
4.8. Development of Conceptual CIM Spine for Extended Enterprise 129
4.8.1. Typical Main Functions within Manufacturing Companies 130
4.9. Key Enablers and Barriers to the EE 134

Chapter Five – EXTENDED ENTERPRISE STRATEGIC PLANNING FRAMEWORK

5.1. Introduction 139

5.2. Analytical Hierarchy Process (AHP) 140
5.3. Extended Enterprise Strategic Planning Process 141

Chapter Six – ORGANISATIONAL STRUCTURE FOR EXTENDED ENTERPRISE

6.1. Introduction 160
6.2. Resources, Capabilities and Core Competencies 162
6.3. Identifying Core Process 166
6.4. Process Breakdown Structure 169
6.5. The Deployment of the Resources and Capabilities 180

Chapter Seven – CONCLUSIONS and RECOMMENDATIONS

7.1. Introduction 183
7.2. Meeting of Research Objectives 183
7.3. Validation of Research Hypotheses 186
7.4. Research Findings 187
7.5. Contributions to Knowledge 189
7.5. Recommendations for Further Work 190

REFERENCES 191

APPENDICES 206
Appendix 1 – Questionnaire 207
Appendix 2 – Interview 212
Appendix 3 – Publications 230

TABLES AND FIGURES

Tables:

Table 3.1: Respondent by sub-sector 46

Table 3.2: The number of employees by respondent 46
Table 3.3: The annual turnover by respondent 47
Table 3.4: Contribution by supplies to product cost 48
Table 3.5: Late delivery by suppliers 49
Table 3.6: Consideration to use common database 50
Table 3.7: Important Factors in choosing suppliers/sub-contractors 51
Table 3.8: Technical Discussion with suppliers 51
Table 3.9: Communications with suppliers/customers 52
Table 3.10: Winning Criteria 54
Table 3.11: Computer-based applications 55
Table 3.12: The objectives of computer-based application 56
Table 3.13: Integrated CIM elements 57
Table 3.14: The benefit of CIM implementation 58
Table 3.15: Improved overall performance due to CIM elements implementation 58
Table 3.16: Interfacing CIM elements with key partners 59
Table 3.17: CIM elements interfaced with key partners 60
Table 3.18: The need of strategy and system for CIM integration 60
Table 3.19: The importance of IT elements for supply-chain integration 61
Table 3.20: The importance of integration with key partners 62
Table 3.21: The concept of Goal Integration 62
Table 3.22: The types of integration 62
Table 3.23: Barriers to S-C integration 63
Table 3.24: The reasons to exchange information with key partners 63
Table 3.25: The items discussed with key partners 64
Table 3.26: Resources to link with key partners 65
Table 3.27: The Company strategy and systems 66
Table 3.28: The support of agility 66
Table 3.29: The objectives toward supply-chain 66
Table 4.1: Key Enablers for the idealised EE 135
Table 4.2: Key Barriers for the idealised EE 137
Table5.1: Comparison Scale 144
Table 5.2: Relative comparisons of main functions in fractions 145

Table 5.3: Relative comparisons of main functions in decimals 145
Table 5.4: Matrix Random Consistency 146
Table 5.5: Relative comparisons of resources of EE in fractions (ENG) 150
Table 5.6: Relative comparisons of resources of EE in fractions (PO) 153
Table 5.7: Relative comparisons of resources of EE in fractions (PPC) 154
Table 5.8: Relative comparisons of resources of EE in fractions (DCS) 154
Table 5.9: Relative comparisons of resources of EE in fractions (BO) 155
Table 6.1: An exemplar application of CPAM with regards to Case Company A 176

Figures:

Figure 1.1: Levels of Enterprise Integration 4
Figure 1.2: Computer Integrated Manufacturing Enterprise Wheel 5
Figure 1.3: New Manufacturing Enterprise Wheel 7
Figure 2.1: Computer Integrated Manufacturing Enterprise Wheel (reproduced) 20
Figure 2.2: New Manufacturing Enterprise Wheel (reproduced) 22
Figure 2.3: Comparison of various Process Initiative 28
Figure 2.4: Processes and Process Initiatives in a Functional Organisation 29
Figure 3.1: Pulp and Paper process 82
Figure 3.2: Paper production flowchart 83
Figure 4.1: The Process of Building-up the EE Reference Model 91
Figure 4.2: Global manufacturing universe 98
Figure 4.3: Global supply-chain network 98
Figure 4.4: Supply-chain with large company as the primary 99
Figure 4.5: Supply-chain with small company as the primary 99
Figure 4.6: The formation of Extended Enterprise 102
Figure 4.7: Four Dimension of Agility 103
Figure 4.8: The key needs of Extended Enterprise 110
Figure 4.9: The criteria of Extended Enterprise 115
Figure 4.10: The Triangle of Extended Enterprise 124
Figure 4.11: Extended CIM Wheel for Extended Enterprise 133
Figure 4.12: Extended Enterprise Strategic Planning Model 138

Figure 5.1: The mapping of functions with resources 142
Figure 5.2: The Hierarchical Structure of Case Company A 143
Figure 5.3: The indexes of main functions for Case Company A 149
Figure 5.4: The indexes of main functions and resources for EE of Case Company A on the hierarchical structure 156
Figure 5.5: The Radar Chart of Ideal and Actual Conditions 158
Figure 5.6: The Radar Chart of Ideal and Actual Conditions of The Resources of EE for Case Company A 158
Figure 6.1: The Competencies, Capabilities and Strategic Hierarchy 164
Figure 6.2: An exemplar application of simplified Work Breakdown Structure (WBS) based on Case Company A 170
Figure 6.3: An exemplar application of simplified Organisation Breakdown Structure (OBS) based on Case Company A 171
Figure 6.4: An exemplar application of WBS/OBS 173
Figure 6.5: The RF/data connectors' fabrication processes for a new model of mobile phone assigned to Case Company A 177
Figure 6.6: Process Breakdown Structure (PBS) for Case Company A 179

CHAPTER ONE

INTRODUCTION

1.1. Background

Manufacturing industry, in preparing for the challenges of the new millennium, is increasingly aware of two urgent needs: firstly the need for integration of information in manufacturing systems (Mejabi and Singh 1997) and secondly the need for agility in the organisational response to markets (Goldman and Nagel 1993).

Over the last two decades Computer Integrated Manufacture (CIM) has provided the major focus for integration of manufacturing activity. Amongst others, the Commission of the European Communities (1982), European Strategic Program for Research and Development in Information Technology (ESPRIT) gives one definition of CIM as follows:

> *"Computer integrated system involving the overall and systematic computerisation of the manufacturing process. Such a system will integrate computer-aided design, computer aided manufacture and computer aided engineering, testing, repair and assembly by means of a common database."*

From this definition, CIM may be regarded as the integrated implementation of Advanced Manufacturing Technologies (AMT) and includes the linking of sub-systems such as Computer Aided Design (CAD), Computer Aided Manufacture (CAM), Computer Aided Engineering (CAE), Material Requirement Planning (MRP), Manufacturing Resource Planning (MRPII) and Computer Aided Process Planning (CAPP) into a common database.

These sub-systems of CIM are often designed and initially operated in isolation and result in what have been called "islands of automation" within the AMT environment. Hannam (1997) stated that individual islands of automation overall effect on enterprise efficiency and ultimately on enterprise profitability is marginal, unless these islands form part of integrated system architecture.

Furthermore, Browne, et al. (1996) argued that interfacing islands of automation, which have been designed in isolation, would always be problematic; it has often led to "localised optimisation" within each of the sub-systems and may cause conflict between functions within the organisation during implementation. Hence, a more effective approach to designing and utilising these sub-systems is needed.

Youssef (1992 A) proposed a definition for AMT as:

> *"A group of integrated hardware and software based technologies, which if properly implemented, monitored and evaluated, will lead to improving the efficiency and effectiveness of the firm in manufacturing a product or providing a service."*

Hardaker and Ahmed (1995) argued that such Advanced Manufacturing Technologies (AMT) can lead to the realisation of competitive advantages only if directed at supporting the key competitive factors of the enterprise e.g. improved quality, reduced manufacturing costs, reduced lead times and enhanced reliability and flexibility.

This supports the argument that enterprises must develop and implement a co-ordinated strategy and justification for the introduction of AMT across all functions, rather than rely on local developments. Therefore, it is essential that the introduction of new elements of AMT should be supported by clear and well-communicated business objectives.

The Computer and Automation Systems Association (CASA) of the Society of Manufacturing Engineers (SME) gives a further definition of CIM:

> *"CIM is the integration of the total manufacturing enterprise through the use of integrated systems and data communications coupled with new managerial philosophies that improve organisational and personnel efficiency."*

From this definition, it may be argued that CIM covers all aspects of a manufacturing enterprise. It is not merely about integrated systems and data communication but must also be supported by new managerial approaches, which promote the effective use of improved systems of communication and organisational structure of people and other resources.

21 major European Companies developed the CIM Open System Architecture (CIM-OSA) under an ESPRIT project. It is intended to provide the industrial community with a widely accepted CIM concept, with an adequate set of architectural constructs to design and structure CIM systems.

The primary objective of CIM-OSA was to provide a framework for analysing the evolving requirements and developing an information and communication system/structure, which enables and integrates the various functions in order to match the requirements. The CIM-OSA group when introducing the concept of a modelling tool (1996), classified enterprise integration into three types (figure 1.1),

- Physical systems integration,
- Application integration, and
- Business integration.

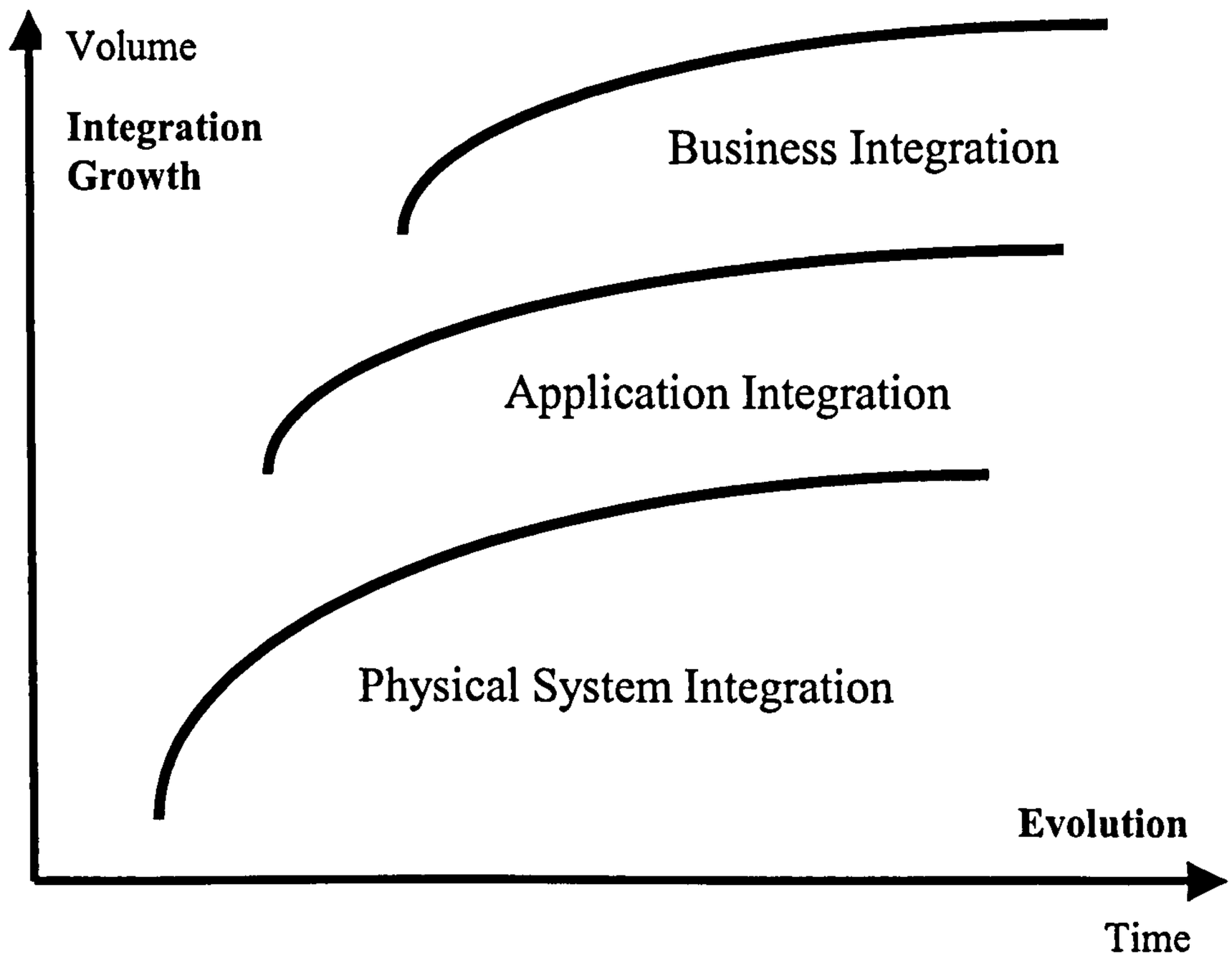

Figure 1.1: Levels of Enterprise Integration

(After CIM-OSA, 1996)

Physical System Integration is concerned with the interconnection of manufacturing automation and data processing facilities, e.g. between CAD, CAM, Production Planning Scheduling (PPS) and manufacturing cells, to permit the interchange of information between "islands of information".

Application Integration is concerned with the control and integration of applications in the data processing sense, which means interoperability between applications and users (humans as well as machines) and supply and removal of information through inter and intra system communication.

Business Integration is concerned with integrating those functions, which manage, control and monitor business processes. Functions that provide supervisory control of the operational processes and in turn co-ordinate the day-to-day execution of activities at the application level are part of this.

Therefore, the modelling of business processes and their interrelations and its use for decision and operational support is a key to business integration.

It may be argued that all these levels of integration should be encompassed within enterprise integration. However, Hardaker and Ahmed (1995) argue that the emphasis has to be on business integration. Only with a focus on the business needs rather than on application or physical system needs, can the move be made from local optimisation to global optimisation.

The Society of Manufacturing Engineers' Computer and Automated Systems Association (CASA/SME) has provided a model of CIM. It introduced the CIM "wheel" in 1985. The wheel illustrates an integrated structure of an enterprise which comprises three layers, contains 21 aspects of enterprise operation and places Integrated Systems Architecture at the centre of the wheel, as may be seen in figure 1.2.

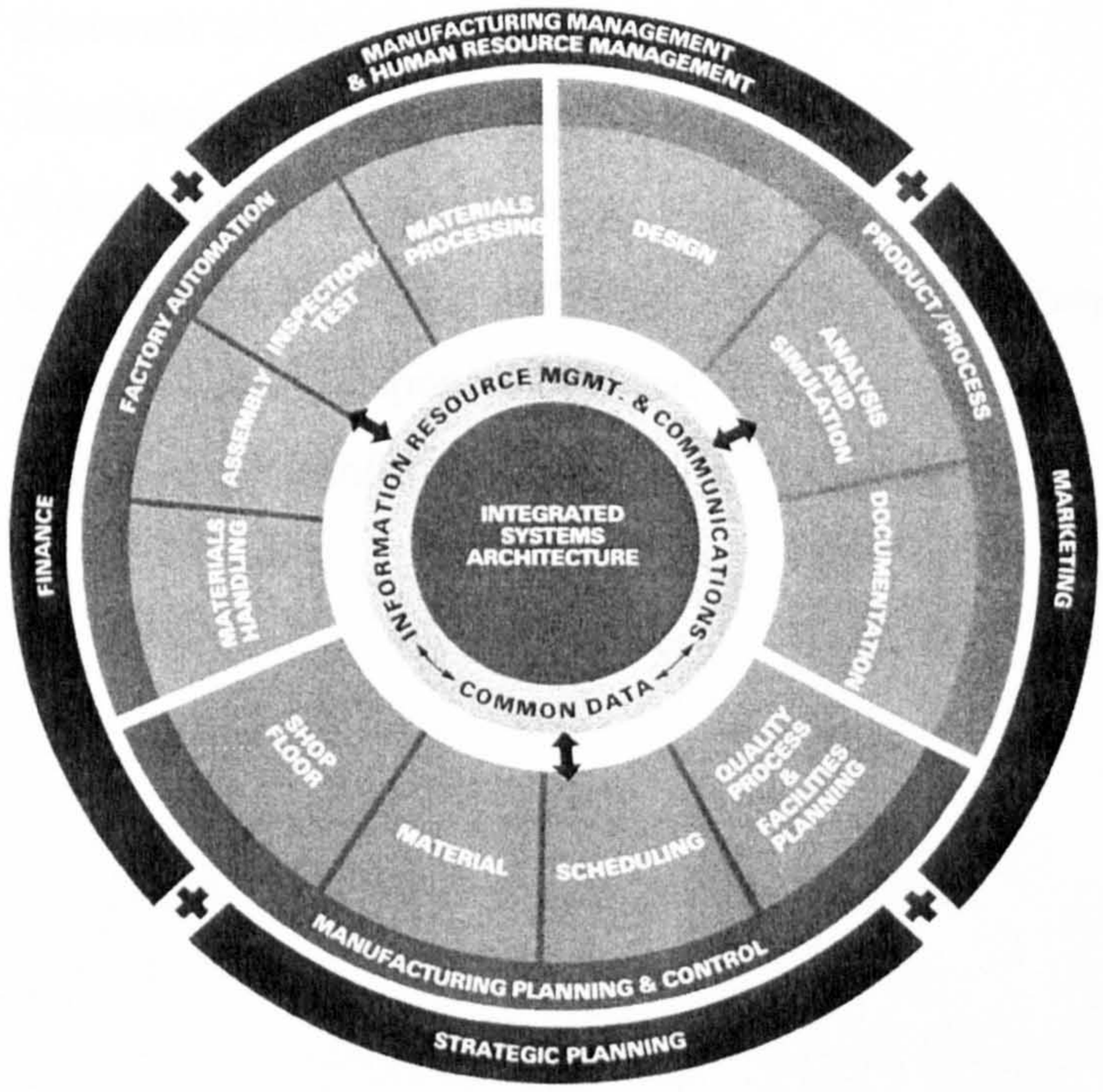

Figure 1.2: Computer Integrated Manufacturing Enterprise Wheel reprinted from the Technical Council of CASA/SME, with permission of The Society of Manufacturing Engineers, Dearborn, Michigan, Copyright 1985, Second Edition

This wheel provides a major benefit in viewing the manufacturing system as a whole, as opposed to the "traditional view" of discrete departments and divisional hierarchy. It provides a means of viewing manufacturing as a boundary-free environment, both vertically and horizontally. However, it may be argued that to relate effectively to today's manufacturing environment it requires further development. The CIM wheel, as shown, omits one very important link in integration, that is integration between the enterprise internal capabilities/systems and its external entities, i.e. suppliers and/or customers.

Following development of the CIM wheel, CASA/SME introduced the "New Manufacturing Enterprise Wheel" in 1993, shown in figure 1.3. This wheel, unlike the CIM wheel previously introduced, is now focused on the customer.

It is divided into six levels:

- Level 1 - Customer as the hub of the wheel,
- Level 2 - Teamwork, People and Organisation,
- Level 3 - Shared knowledge and Systems,
- Level 4 - Customer support, Product/Process, and Manufacturing,
- Level 5 - Resources and Responsibility, and
- Level 6 - Manufacturing infrastructure.

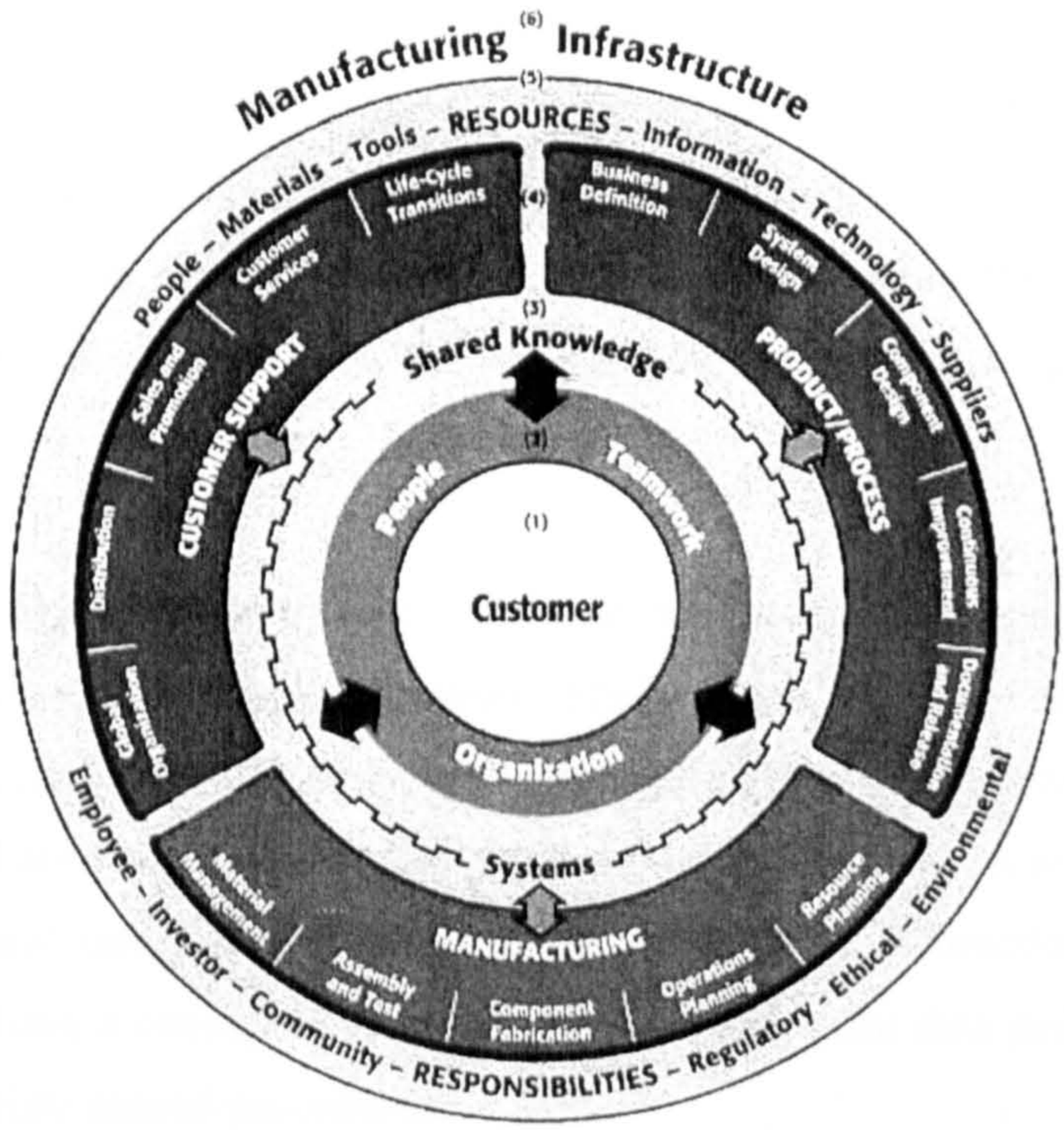

Figure 1.3: New Manufacturing Enterprise Wheel reprinted from the CASA/SME, with permission from The Society of Manufacturing Engineers, Dearborn, Michigan, Copyright 1993, Third Edition

This new wheel is an improvement, given its generic characterisation of functional communications and connections as well as its relative simplicity.

However, manufacturing enterprises worldwide appear increasingly to be adopting the concept of Supply-Chain Management (SCM) in the design of their organisations and systems, therefore interactions and links with suppliers as well as with customers are becoming more and more substantial.

This wheel does not fully describe and establish those relationships. Moreover, these relationships must be developed further in terms of integration across the value chain, as stated by Browne, et al (1995), when giving their view on the "Extended Enterprise" as:

> *"The integration of companies to facilitate inter-enterprise networking across the value chain."*

Also missing from this wheel are the aspirations and needs of an enterprise, i.e. its goals. It is very important for every participating enterprise within Extended Enterprise to determine and communicate its goals/aspirations and its needs, then common ground may be established with other enterprises within the partnership. Further and detailed discussion of CIM and the "New Manufacturing Wheel" is presented in Chapter Two.

Miller et al (1986) identified three types of integration, namely, technical integration, procedural integration and goal integration. They go on to state that technical integration is concerned with the activity of establishing electronic communication between functional areas e.g. communication channels, communication protocols and standards. Procedural integration is achieved when the different functional groups, which share data, have a consistent view of how to interpret that data and hence, are able to use appropriate shared procedures.

However, goal integration, according to Browne, et al (1996), is the highest level of integration i.e. the level which is considered to have been achieved when different functions (or islands) either internal or external, use shared data and information to achieve shared/common goals. The sharing of data and information is not only within an enterprise's internal functions but also across enterprise boundaries and hence may provide a foundation for effective inter-enterprise integration.

Comparison of the different views of integration appears to suggest that "goal integration" in some ways is analogous to the "business integration" identified by CIM-OSA. Furthermore, Browne et al (1995) argued that if the challenge of CIM in the past was to realise integration within the factory, the challenge to manufacturing now is to facilitate inter-enterprise networking across the value chain. However, a search of the literature suggests that very little work, if any, has been carried out with respect to the issue of goal integration or business integration, let alone its implications for the "Extended Enterprise".

From this it appears that there is a need for work to be carried out to identify the extent to which goal integration takes place in typical manufacturing organisations and to identify models and procedures for its promotion and implementation. Such work must take into account the increasing importance of "agility" (Booth, 1996) with respect to the success of manufacturing enterprises, as effective integration is seen as one of the primary requirements in providing agility.

1.2. Research Hypotheses

Today, competition is no longer supplier against supplier but rather supply-chain against supply-chain (Craven, 1998). This would suggest an increasing need for integration of systems at all levels and in all areas of a manufacturing organisation's activities.

It requires more than just integration within the internal function of an enterprise; it requires integration with suppliers, sub-contractors, partners, and customers, i.e. inter-enterprise integration. Since there is no guarantee that these enterprises will be situated in close proximity geographically, not to mention the difference in culture, then various new difficulties are likely to rise. The concept of integrating a number of independent enterprises, which may be globally dispersed, to satisfy a common goal, requires the development of new approaches to enterprise organisation, systems and management.

It is essential that CIM, in this context, is able to enhance the ability of organisation members, to interact effectively and efficiently in the pursuit of agreed common goals. There appears to be a need for the development of an organisational structure and Information and Communication Technology (ICT) framework to provide direction and support for enterprises, which aim to operate effectively within an Extended Enterprise environment.

It comes into view from the literature that Youssef (1992 A and 1992 B) and Kidd (1994) had seen agility from two different perspectives. Youssef had seen agility through integration amongst suppliers, internal capabilities and customers, while

Kidd had observed it from integration of organisation, people and technology. It is, therefore, appropriate in the context of this research to combine these perspectives and provide a more complete view.

Internal capabilities of an enterprise, according to Youssef (1992 B), include appropriate implementations of AMT (i.e. Information Technology, a wide-database shared by all functions) and top management commitment to change. There is a need to extend this idea and to identify the internal enterprise functions and systems (including manufacturing control) that may be used to achieve effectiveness and agility for Extended Enterprise.

Kidd (1994) stated that the strategy to develop agile manufacturing should focus on ways to achieve integration of organisation, people and technology. Therefore, enterprise's agility will be achieved only if appropriate technologies have been chosen and they match with organisational and people's agility.

He goes on to say that one of the effects of Business Process Re-engineering (BPR) has been a move towards an increased emphasis on core competence and hence greater use of sub-contractors/partners. Consequently, this places even a greater emphasis on Supply-Chain Management and may represent both opportunities and threats for SMEs.

Hence, hypotheses that may underpin this research may be stated as follows,

- To be competitive in the medium to long-term, manufacturing enterprises, in particular SMEs, need to enhance the integration of their activities towards the concept of EE.

- A reference model and an organisational structure for EE, which focuses on the "highest" level of integration, at the strategic level, will support enterprises in progressing to effective operation within EE.

1.3. Research Objectives

The objectives of this research, necessary to validate the research hypotheses, are:

- To review the current state of enterprise integration and the application of CIM as a tool to progress towards higher levels of inter-enterprise integration within manufacturing industry.

- To develop an Extended Enterprise reference model which focuses upon integration at the strategic level, rather than simply at the interface of CIM sub-systems such as CAD/CAM, CAE, MRP, MRP II, etc.

- To develop a method/framework to support strategic planning with respect to Extended Enterprise operation.

- To develop an organisational structure for EE which provides effective identification, rationalisation and deployment of core competencies and satisfies the requirement for goal integration and agility.

1.4. Research Methodology

The following research methodology was developed to achieve the research objectives:

- Extensive review and analysis of published reports and research papers in the area of enterprise management, manufacturing control systems, manufacturing information systems and Advanced Manufacturing Technology. Information gathered with respect to alternative approaches to inter-enterprise collaborations and strategic alliances.

- Design, distribution, and analysis of a questionnaire to identify current practice with respect to Extended Enterprise.

- Perform a series of semi-structured interviews with a range of appropriate experts to provide additional information concerning current practice and current attitudes towards EE operations.

- Conduct a series of industrial case studies and analyse the data gathered to assist with identification of the main characteristics and key issues of current practice with respect to strategic alliances such as inter-enterprise collaborations, supply-chain relationships and key indicators of what might be regarded as Extended Enterprise.

- Draw upon the results of the above to develop a reference model, based on characteristics/indicators of Extended Enterprise, giving emphasis to integration at the strategic (goal) level rather than simply at the interface of sub-systems.

- Develop an approach to measure enterprise performance with respect to effective Extended Enterprise practice and to provide direction for development and improvement.

- Identify the requirement for a modified organisational structure within Extended Enterprise, to facilitate the effective identification, rationalisation and deployment of core competencies.

1.5. Research Deliverables

- Reference model for Extended Enterprise.

- Strategic planning procedure for Extended Enterprise.

- Organisational structure for effective identification, rationalisation, deployment and development of core competencies within EE.

- A series of case studies to identify and illustrate key issues with respect to Extended Enterprise.

- A series of refereed publications presented and included in international conference proceedings.

1.6. Structure of the Thesis

This introduction has set out the research hypotheses, objectives and methodology. Chapter Two provides a literature review, which mainly examines current practice and published research on computer application in manufacturing and CIM development in the context of Extended Enterprise.

Chapter Three examines current practice in supply-chain relationships within the context of Extended Enterprise by means of a questionnaire, interviews of experts and a series of industrial case studies.

Chapter Four focuses on the development of the reference model for Extended Enterprise.

Chapter Five discusses Strategic Planning Process for Extended Enterprise. The process utilises the Analytic Hierarchy Process (AHP) approach to determine the main drivers of resources with respect to organisational functions in order to move towards EE.

Chapter Six examines the organisational implications of Extended Enterprise by considering the identification, rationalisation and deployment of core competencies across Extended Enterprise and develops a conceptual approach towards Process Breakdown Structure (PBS). The role of Project/Programme Management approaches as the basis for Extended Enterprise is introduced and discussed.

Chapter Seven provides discussion with respect to the degree to which the objectives have been achieved, identifies the contribution to knowledge of the research and goes on to identify appropriate areas for further research.

CHAPTER TWO

REVIEW OF PUBLISHED RESEARCH

2.1. Introduction

A major challenge to manufacturing industries today is meeting higher variability of customer demand with consequently lower production volumes for particular products. This requires manufacturing at the right time, the precise quantity of appropriate quality at reasonable cost. The increased emphasis on customisation and shorter lead-time results in the need for organisations, especially manufacturing enterprises, to be more effective and efficient. They also must be more agile in their response to changing market demands.

Youssef (1992 B) stated that agile manufacturing, quick response and time to market are interrelated. He suggested also that there are three "pillars" which determine speed and agility, namely: suppliers, internal capabilities and customers. Furthermore, Kidd (1994) argued that there are three primary bases, which should support the structure of agile manufacturing, namely: innovative management structures and organisation, a skill base of knowledgeable and empowered people and flexible and intelligent technologies. Therefore, it may be argued that to become an agile enterprise, the three "pillars", i.e. suppliers, internal capabilities and customers should be expanded across the three primary resources i.e. organisation, people and technologies.

Yusuf (1996) examined the extension of MRPII with a focus primarily on the integration of the internal capabilities of the Company, but did not investigate the "integration" between a manufacturer's external capabilities, i.e. suppliers, sub-contractors, partners, and customers. He suggested that integration between a company's internal capabilities with these latter elements would form the basis for

what is described as "Extended Enterprise" (EE). Therefore, it may be argued that agility and integration appear to be key issues for Extended Enterprise.

Some work has been done in the area of integration (Karwowski et al, 1994; Parks et al, 1997; Mejabi and Singh, 1997; Yusuf and Little, 1998), and in agile manufacturing (Burgess, 1994; DeVor et al, 1997; Gadients et al, 1997), but none has yet developed a significant correlation between them. O'Neill and Sackett (1994) argued that Extended Enterprise follows a philosophy where people throughout the business supply-chain, participate in the decision-making process. This demands the development of social skills that enable "knowledge integration".

The emphasis will be not only for integration of the internal capabilities of an enterprise but also for integration across the supply-chain, starting from new product development to product de-commissioning. However, very little, if any, work so far has been identified which addresses the issue of the highest level of integration, i.e. goal integration, claimed by Browne, et al (1996) discussed in section 1.1, as the highest level of integration.

Computer Integrated Manufacturing (CIM) has been defined as the interface of Computer Aided Design (CAD), Computer Aided Manufacturing (CAM), and Direct (or Distributed) Numerical Control (DNC) with logistic information systems (Van Houten, 1992). Agile manufacturing, according to Wang, et al (1996), is a concept to standardise common manufacturing data, research data, and CAD/CAPP/CAM structure and integrate them into a macro network.

Given that this network is widely accessible by any authorised users through the Central Network Server, it follows that users from any collaborating enterprise can access the network and input their discrete product information. Hence, it may create an information and communication infrastructure for an inter-enterprise network. This information and communication infrastructure may then form an essential element (spine) for a more widely based Computer Integrated Manufacturing (CIM) architecture.

2.2. The Evolution of Computer Integrated Manufacturing (CIM) to Support Enterprise Integration (EI)

The use of computers in manufacturing can be traced back as early as 1950. At that time the general purpose of computers in manufacturing was mainly as a tool to assist inventory management or to control processes. In the early 1960's the Programmable Logic Controller (PLC) was developed and it is noted as the period when Numerical Controlled (NC) machine tools were first introduced. This was followed by the development of the first three-dimensional CAD systems in the early 1970s, with work done at the Massachusetts Institute of Technology (MIT). The following paragraphs provide a background and a brief introduction to the development of the two primary areas of computer application in manufacturing, i.e. CAD and CAM.

In the "early" days CAD was seen predominantly as a means of speeding up, and in some cases automating, the process of design and analysis. It also facilitated definition, analysis and manufacture by introducing Computer Aided Manufacture (CAM) of products possessing complex geometry. Over the years CAD has been developed further to provide an industry standard to exchange design information within a company and between companies, largely through the development of standard protocols for data exchange, such as DXF, IGES, STEP, etc.

Despite the fact that significant improvement has been made to design systems, it may be argued that today's CAD systems provide largely, "technical integration". This is due to the fact that CAD systems tend to be used to integrate technical aspects of the design function (e.g. definition of geometry and surface finish) with technical aspects of the manufacturing function (e.g. NC part programming).

Nevertheless, Ranky (1994) regarded CAD as one of the "core modules" of the CIM concept, suggesting that it should be developed and utilised with a "company-wide" approach. He then argued that CAD should be integrated into the manufacturing company's data processing system, providing the possibility of integration with subsystems such as project engineering and planning, NC/CNC part programming,

tool design, the MRP system and other modules. However, he does not expand his idea of integration outside the Company's boundary; hence his view on integration may be classified as "procedural integration" or "application integration" as described in Chapter One. Therefore, a "higher level of integration" is yet to be developed.

The emergence of Computer Aided Manufacture (CAM) was initially an effort to automate and provide assistance in preparing programs and production plans for Numerically Controlled (NC) and Computer Numerically Controlled (CNC) devices: robots, Co-ordinate Measuring Machines (CMM), etc. within a factory. During its development, CAM also covered manufacturing systems areas such as process planning and production control. Hence, it led to the development of Computer Aided Part Programming and Computer Aided Process Planning (CAPP).

In recent years the effectiveness of Computer Aided Part Programming and Computer Aided Process Planning has been improved by the development of interactive software. Such systems utilise database technology to support selection of tooling and cutting data and simulation software to reduce lead-time and improve the quality associated with introduction of new components or products. However, this is not an easy task, especially when dealing with batch manufacturing.

The major difficulties in batch manufacturing arise from the high levels of product variety and small manufacturing lot sizes. Decisions made at the design stage will significantly affect manufacturing cost, quality, and lead times. The impact of these product variations in manufacturing is higher investment in equipment, higher tooling costs, more complex scheduling and loading, lengthier set-up time and costs, higher levels of scrap, and higher quality control costs. In order to compete in global markets it is necessary to improve the productivity in batch manufacturing industries.

Therefore, some innovative methods are needed to reduce product cost and lead-time and enhance product quality to help increase market share and profitability. In addition, what is also needed is a higher level of integration of the design and

manufacturing activities in a company to meet the requirements of suppliers and customers.

The adoption of Group Technology (GT) may provide a link between design and manufacturing. This allows small batch production to gain economic advantages similar to those of mass production while retaining the flexibility of the job shop. Classification and coding systems as part of the front end of CAD and CAM systems may be used. Their functions being primarily to rationalise the product range in terms of variety of parts, process planning and manufacturing organisation and control.

However, there are relatively few examples of all of their elements being effectively linked at the technical level, let alone the business level. As with CAD, integration has been largely restricted to the technical/application level.

The Origin of Computer Integrated Manufacturing (CIM)

Harrington (1973) appears to be the first author to make reference to the term Computer Integrated Manufacturing (CIM), although he himself was, at first, reluctant to use the acronym of CIM. This terminology was then used widely by others to describe the use of computer technology to integrate manufacturing processes and systems. CIM often means different things to different people, despite the fact there have been numerous attempts by industrialists, researchers and academics to define CIM. The most appropriate in the context of this research is the one provided by the Computer and Automation Systems Association (CASA) - Society of Manufacturing Engineers (SME) – USA (1985):

> *"CIM is the integration of the total manufacturing enterprise through the use of integrated systems and data communications coupled with new managerial philosophies that improve organisational and personnel efficiency."*

This was later followed by the development of the CIM wheel introduced in section 1.2 by the Society of Manufacturing Engineers (SME) which is reproduced as figure 2.1.

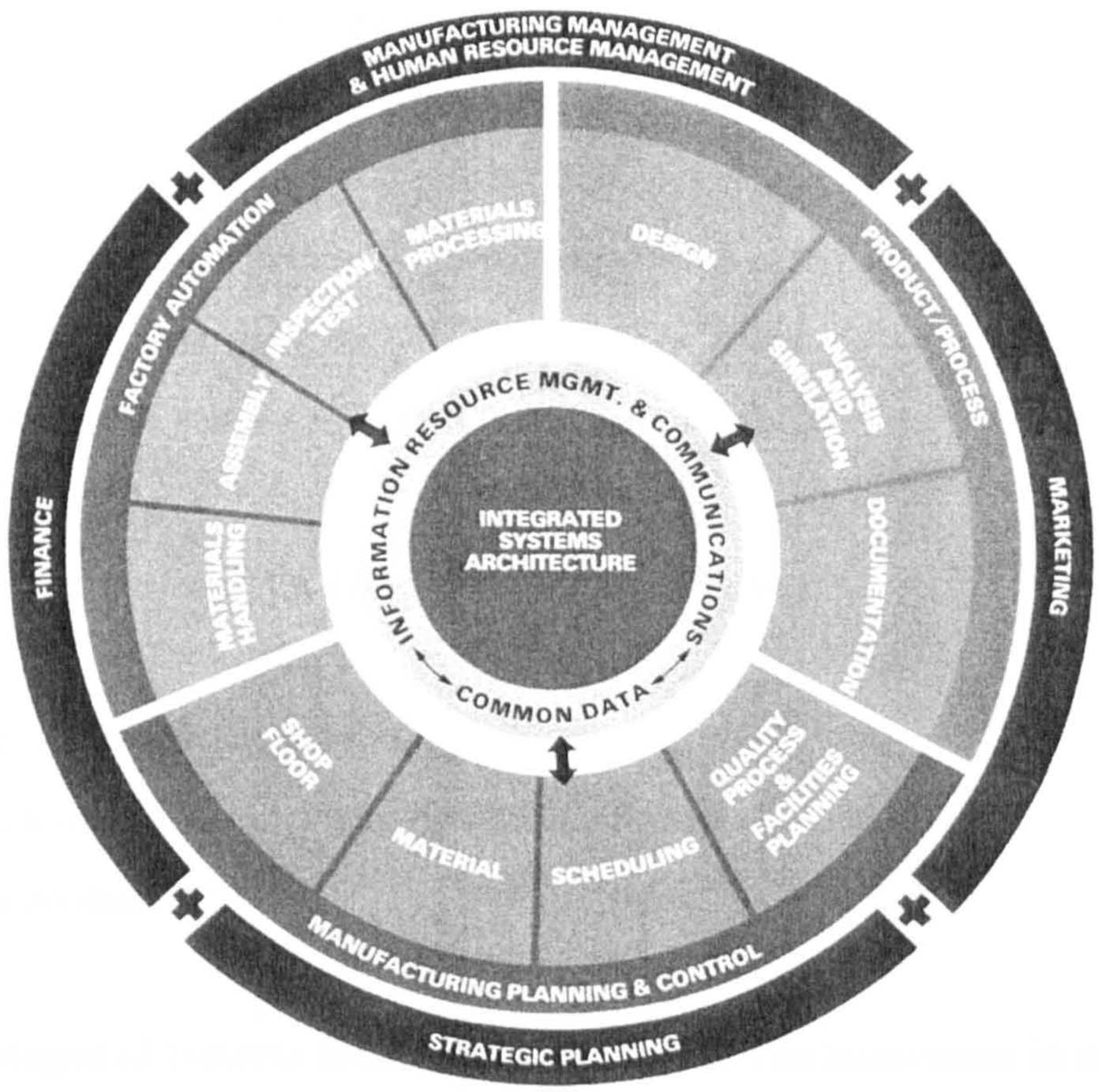

Figure 2.1: Computer Integrated Manufacturing Enterprise Wheel reprinted from the Technical Council of CASA/SME, with permission of The Society of Manufacturing Engineers, Dearborn, Michigan, Copyright 1985, Second Edition

This conceptual diagram identifies twenty aspects of company's operations and utilises three layers of integration:

1. The outer layer represents management in general:

- Finance,
- Manufacturing management and human resource management,
- Marketing,
- Strategic planning.

2. The middle layer represents operation process such as:

- Factory automation,
- Product/process,
- Manufacturing planning and control.

These operation processes represent all the activities in the Design and Manufacturing phases of a product life cycle, from concept to assembly, which include:

- Materials handling, materials processing,
- Assembly, inspection/test,
- Design, analysis and simulation,
- Documentation,
- Quality process and facilities planning, scheduling,

3. The centre/third layer represents:

- Information resource management and communications, and
- Common data.

The wheel has integrated systems architecture as its core. The innovation in this CIM wheel is that there is an attempt to move away from the traditional view of departmental or compartmental division within manufacturing industries towards "total integration" within the Company.

The wheel emphasises the totality of integration. However, in order to accommodate the present and future challenge of manufacturing industries this wheel still needs to be improved and developed, as the integration will not only be within the Company but also between companies. The wheel obviously does not have external links between the Company and its suppliers, sub-contractors, and/or customers.

Partly as an attempt to provide a remedy to some of these deficiencies the Computer and Automated Systems Association of the Society of Manufacturing Engineers (CASA/SME) in 1993, once again, proposed a "new manufacturing enterprise wheel" as shown in figure 2.2.

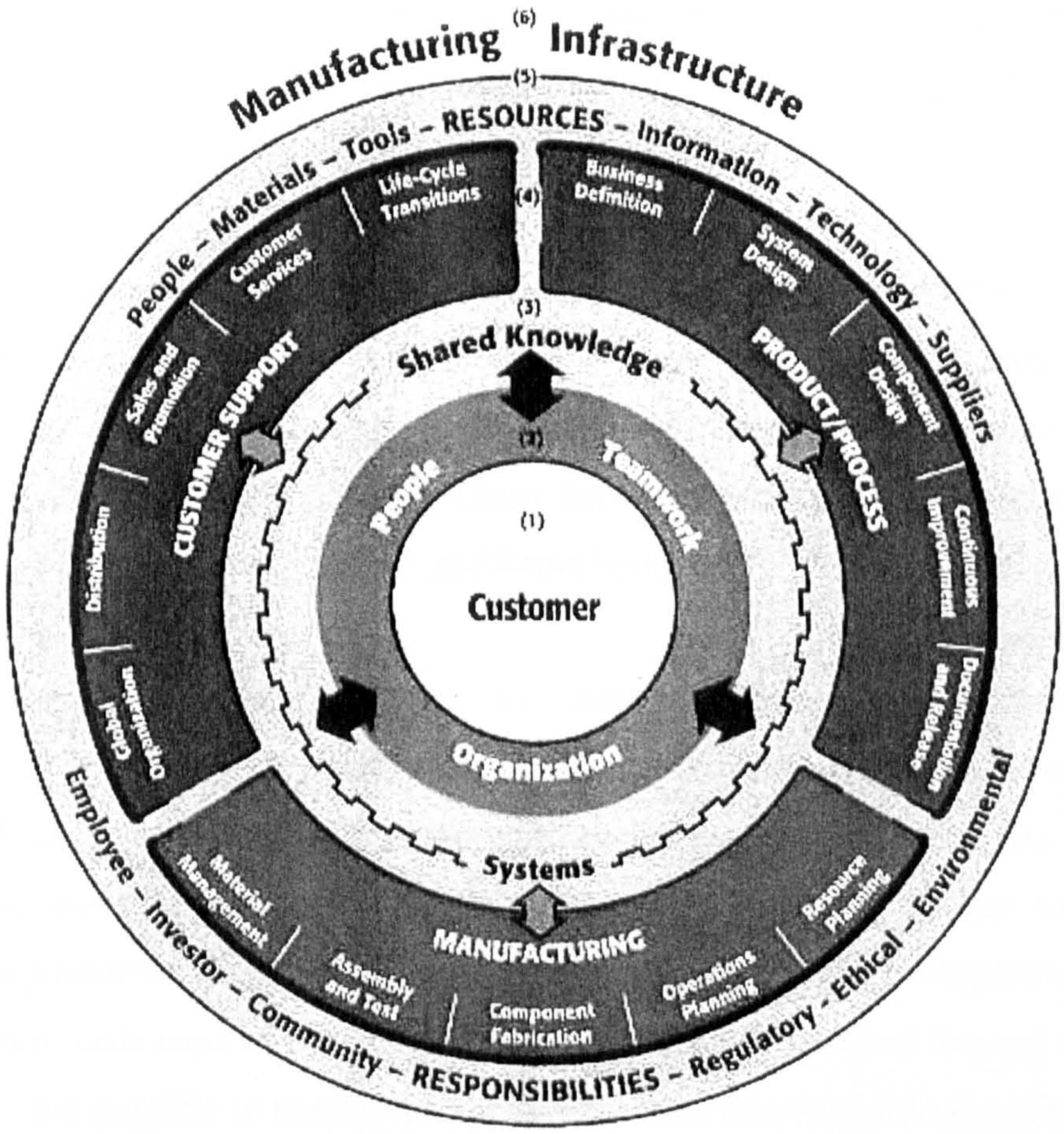

Figure 2.2: New Manufacturing Enterprise Wheel reprinted from the CASA/SME, with permission from The Society of Manufacturing Engineers, Dearborn, Michigan, Copyright 1993, Third Edition

This wheel reflects the changes in thinking over the intervening period with its focus on the customer. The customer is now at the centre of the wheel. It identifies 15 key aspects of manufacturing, divided into 6 levels:

- Level 1 - Customer as the hub of the wheel,
- Level 2 - Teamwork, People and Organisation,
- Level 3 - Shared Knowledge and Systems,
- Level 4 - Customer support, Product/Process, and Manufacturing,
- Level 5 - Resources and Responsibility, and
- Level 6 - Manufacturing Infrastructure.

The features that commended this model to its originators were its relative simplicity, its generic characterisation of functional interactions and the applicability of its processes across a variety of industries (Hannam, 1997).

However, in order to fully attain CIM, it should describe also the interrelationship of existing and new technologies with respect to communications, data management, human interaction, process planning, and execution control. Data communication is the area identified as often causing chaos between systems. This is partly due to systems incompatibility and various platforms being used.

Different vendors were required to establish common mechanisms for communicating in a heterogeneous hardware environment. The environment presented to the applications programmer should be identical from one vendor's computing environment to the other. The result would be similar to today's relationship between higher-level languages and vendor supplied compilers. As long as the source code used adheres to some sanctioned set of standard data-set types and functions, it is possible to transfer an application from one vendor to the other.

A limitation of this wheel is that, although the wheel is centred on the customer, it is still not clear how it links with other external entities such as suppliers, sub-contractors, and partners. Hence, work needs to be carried out to link this wheel with one that can facilitate an effective link mechanism between suppliers, sub-contractors, and partners on the one hand, and customers on the other hand.

Computer Integrated Manufacturing (CIM) has been regarded as the highest possible computer-based integration within the internal capabilities and systems of a company. Therefore, the increased implementation of CIM within modern manufacturing systems environments appears inevitable.

Browne, et al (1995) stated that if the challenge of CIM in the past was to realise integration within the factory, the challenge in the future is to facilitate inter-enterprise networking across the value chain, i.e. Extended Enterprise (section 1.1).

As such, it may be used to provide a "spine" for the implementation of Extended Enterprise.

Hence, it may be argued that CIM in the future should be viewed and promoted within the proposed reference model of Extended Enterprise. Appropriate implementation of CIM therefore may also be viewed as one of the key indicators and drivers of Extended Enterprise concept. This is discussed further in Chapter Six.

2.3. Enterprise Integration

2.3.1. Introduction to Enterprise Integration (EI)

Originally, EI was adopted in order to decrease new product development time, increase design quality, provide decision support systems and create an industrial environment where the production of goods will be based closely on market requirements. EI is also recognised as an approach to improve the performance of complex organisations by managing the interactions among the participants (Patankar and Adiga, 1995). Various approaches have been proposed for EI (Jochem, et al 1992; Vernadat 1993; Bernus, et al 1996; Kosanke 1997). However, Vernadat (1993) proposed that the most important feature of EI is its focus on business integration.

Therefore, it is fair to argue that this requires understanding the way business processes and enterprise policies are structured and co-ordinated in the enterprise, how they relate to one another, and how they can be efficiently executed using the enterprise "means" i.e., human resources, applications, and physical resources.

Given that enterprise integration is also concerned with facilitating information, control, and material flow across organisational entities by connecting all the necessary functions and heterogeneous functional entities such as information systems, devices, applications, and people, it may be argued that enterprise integration is the vertical and horizontal alignment of plans, business processes, and information systems across organisational and functional boundaries to provide competitive advantage.

It means that the process of achieving successful enterprise integration may include all managerial, organisational, and technological factors that enable cross-functional process integration. The end result might be a customer orientated organisational structure with information systems that are formally linked to processes and the integration of processes needed to establish or to retain customer satisfaction.

Vernadat (1993) also stated that the enterprise "means" such as human resources, applications, and physical resources are used in conjunction with enterprise "objects" i.e. events, entries, physical entities, etc or conditions. This, in turn, according to Vernadat will improve communication, co-operation, and co-ordination within this enterprise so that the enterprise behaves as an integrated whole, hence, enhancing its overall productivity, flexibility, and agility or capacity for management of change.

Given the fact that an enterprise will evolve over time according to both internal needs and external challenges and opportunities, it may be also fair to say that enterprise integration has to be an ongoing process, rather than a one-off effort. Hence, enterprise integration should be used within the framework of the continuous improvement concept.

Lim, et al (1997) argued that the performance benefits of EI are unique; however achieving them is not straightforward. Some frameworks have been provided to assist in the development and implementation of computerised information systems for Simultaneous Engineering (SE). In particular, Computer Integrated Manufacturing (CIM) has been used to assist EI (CIM Reference Model Committee, 1989; Graefe and Thompson, 1989; Sycara and Roboam, 1991; Vernadat, 1993). Their frameworks appear to achieve a higher level of integration.

However, most of these researchers tend to concentrate on integrating various internal stages of the product life cycle from product specification through design to manufacture. The integration processes, once again, addressed only the internal capabilities or functions of the enterprise.

Hence, it still fails to address the integration issue between the enterprise's internal capabilities with the external capabilities of customers and suppliers, which according to Yusuf (1996), would form the basis for Extended Enterprise (EE).

2.3.2. Enterprise-Wide Integration (EWI)

EWI has been regarded as another attempt to provide integrated-manufacturing operations. The objective of enterprise-wide integration is to integrate people, technology, business process, customers and suppliers located at dispersed geographical locations (Mejabi and Singh, 1997).

They claimed that there are three tools for addressing the locational and structural requirements of an enterprise, i.e. network communications, database management systems, and GroupWare. These tools facilitate the working of team members of a "virtual organisation" as they interact with customers and suppliers in order to make faster and more effective group decisions. Such interaction sets the basis for EWI, encompassing various units of an enterprise, possibly located in different cities or even different countries, as well as customers and suppliers world-wide.

Therefore, enterprise-wide integration is required to ensure that all the technical and organisational units of an enterprise can work concurrently. However, this requires an extremely large set of information about a large number of activities, including product conception, manufacturing, customer delivery, in-field services, and product de-commissioning.

Moreover, many of these design, manufacturing, distribution, and service activities, responsible for generating and using volumes of data, may be scattered across a wide spectrum of physical locations. The information has typically been generated by a diverse set of highly specialised software tools run on heterogeneous computing hardware. Incompatible media with divergent data structures and formats are often used for data storage. This is due to irregularities of the tools or systems that would eventually use the data.

Rapid development of computing power and technology has made this so-called "technical integration" increasingly feasible. However, the highest level of integration is much more than simply coupling of processes or information flows between them. Whilst information flow plays an important role in integration, it is just a subset of the overall integration processes. Take an example of a system having two processes, process A and process B, which must be executed sequentially. As such, the situation may arise that a decision about process A should not be made without considering the consequences on process B.

2.4. The Evolution of Manufacturing Management

2.4.1. Just In Time (JIT) Manufacturing

One of the earliest attempts to focus the manufacturing system upon the precise requirements of a specific customer was developed by Toyota in the form of JIT.

JIT was originally introduced in Japan in the 1970's. It is very much a philosophical approach rather than a technical one and seeks a more efficient manufacturing process. The use of JIT to eliminate waste for example in the form of work-in progress or scrap is focussed on both enterprise internal operations and customer quality. That is by having customers to "pull" demand on manufacturing that extends through each operation right back to the suppliers, with manufacturing ceasing immediately when a defect occurs, until the source of the defect is eliminated.

Enterprises are now talking in terms of customer-driven manufacturing, with a Supply-Chain Management approach to manufacturing in which design, and manufacturing, up to final assembly may, take place virtually anywhere in the world.

The pressure for many organisations to distribute their manufacturing resources led to many inter-plant integration problems. This led to the development of the concept of Business Process Re-engineering (BPR) in order to resolve these and streamline the business processes to deliver customer requirements more effectively (Revenaugh 1994; Guimaraes and Bond 1996; Valentine and Knights 1998; Wells 2000).

2.4.2. Business Process Re-engineering (BPR)

There are many terminologies that have been used by various authors to describe BPR, such as business processes re-design (Tinnilä 1995; Cotoia and Johnson 2001), business process management (Armistead 1996; Zairi 1997), core process re-design (Buchanan 1998) and business process improvement (Lee and Chuah 2001). Their approaches have different characteristics in terms of the degree of change, the scope of the exercise; the potential risks as well the potential benefits (Childe et al 1994). However, earlier Harrington (1992) provides a definition, which is appropriate for this work:

> *"A systematic methodology developed to help an organisation make significant advances in the way in which its business processes operate."*

Childe et al (1994) introduced a spectrum of process improvement activities. It represents comparison of various process initiatives and ranks them. The nature is ranked from incremental to radical; the scope is ranked from internal to external; the risk is graded from low risk to high risk; and potential benefit is classified from operational to strategic as may be seen in figure 2.3.

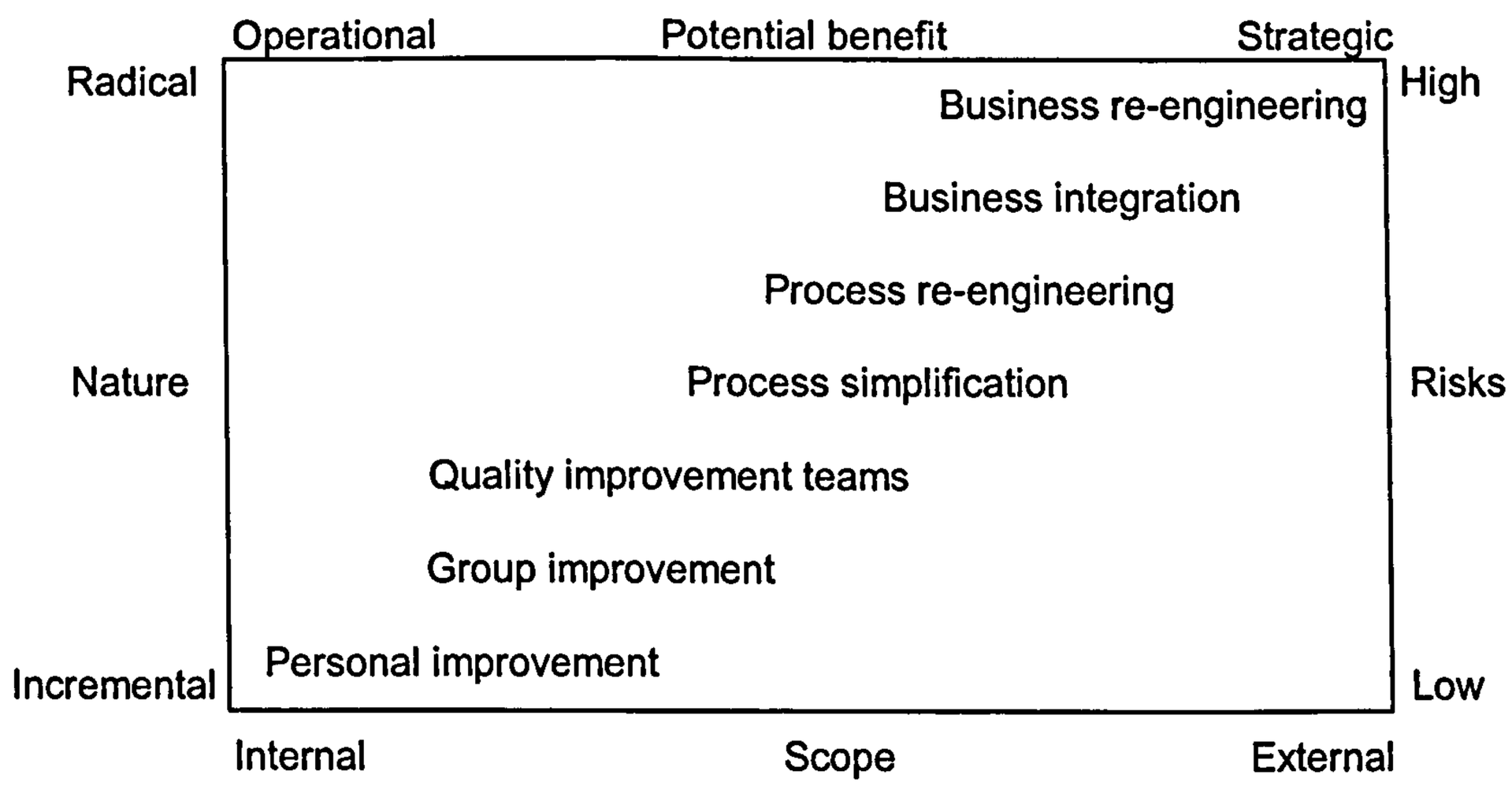

Figure 2.3: Comparison of various Process Initiatives
(After Childe et al 1994)

They furthermore presented functional "silos", as shown in figure 2.4 that may be found in a typical business organisation, which may be marketing (A), design (B), manufacturing (C), and assembly functions (D). This figure describes when an individual (described as a dot) within a function seeks to improve its part of the process. These improvements are essentially small in scale, internal in scope, low in risk and operational in outlook.

The next is Group improvement, which is represented by a circle within the design function. Within this initiative, a group of individuals may come together to improve the manufacturability of their design. Then, Quality Improvement Team (QIT) illustrated by the small ellipse that extends into other functional areas of the enterprise and for instance will try to bring about some radical changes. However, QIT tends to be constrained by existing organisational boundaries and centred upon a particular business function.

In actual fact, it is Process Simplification (PS), which may be regarded as the first real type of process-based change, since it focuses on the whole process. Hence, it will involve all functions within the organisation to take part.

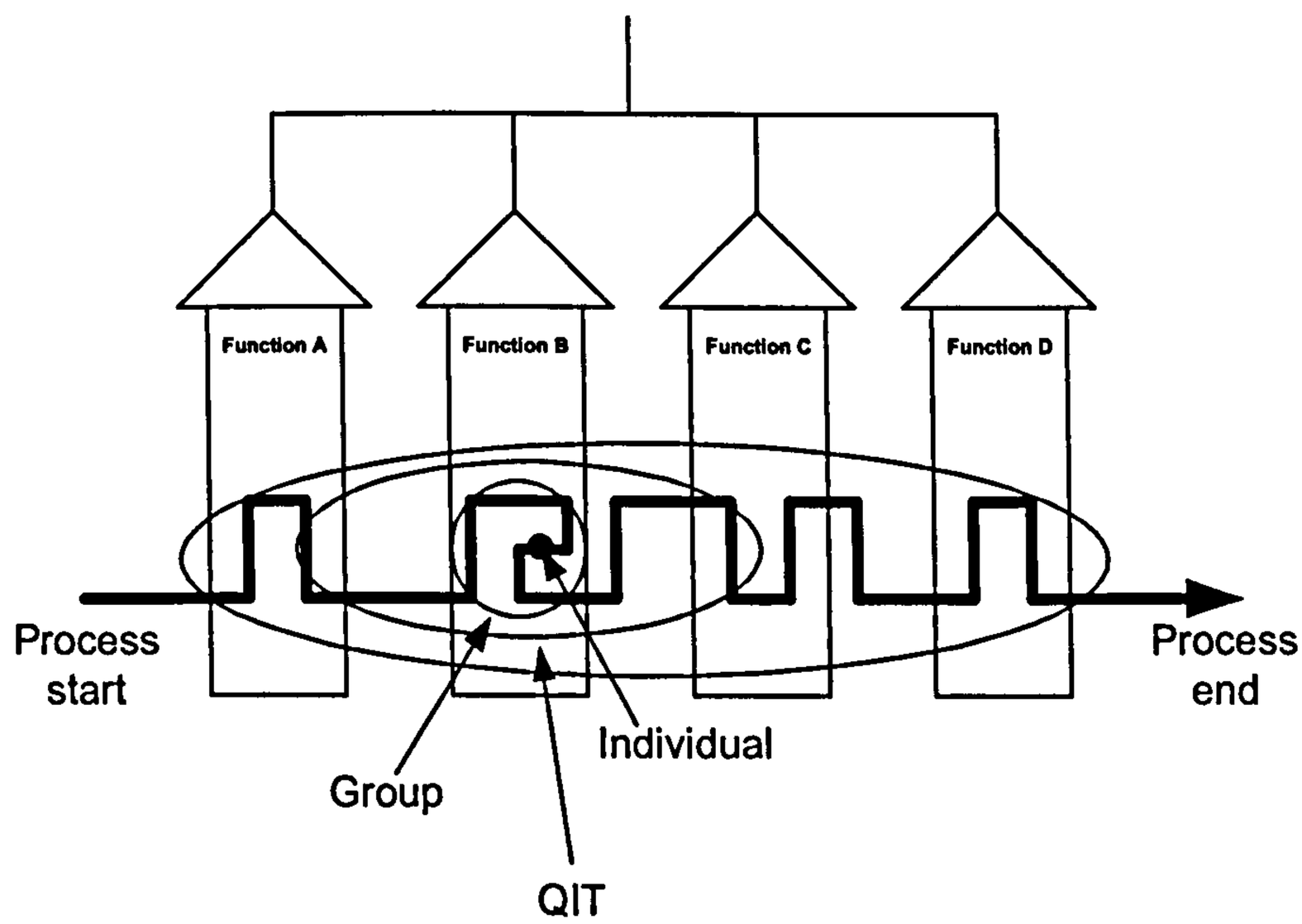

Figure 2.4: Processes and Process Initiatives in a Functional Organisation (After Childe et al. 1994)

The highest level of process improvement initiative is Business Re-engineering rather than Business Process Re-engineering (BPR). This looks at the improvement of the processes that exist within the organisation to exploit its capabilities, and lead to the growth of business in new and different areas. Many leading companies are competing upon the basis of enhanced capabilities.

Stalk et al. (1992) define capabilities-based competition as:

> *"The ability to capitalise upon the organisational practice and business processes in which capabilities are rooted."*

Childe et al. (1994) furthermore argued that such a capability focus identifies a set of strengths in core processes, which enables companies to compete in entirely different ways in a competitive environment.

It follows that this approach may also be seen within an Extended Enterprise context where those different functions represent different, individual, and independent enterprises, which have successfully, re-engineered their internal process capabilities with respect to available resources.

These enterprises then move on to collaborate closely to exploit their external capabilities and resources, i.e. suppliers, sub-contractors, customers, and partners within Extended Enterprise context. As such, each of them is now focusing on its core process in order to gain competitive advantage.

The processes illustrated in figure 2.4 will increasingly involve external entities of an enterprise, i.e. suppliers, sub-contractors, partners, or customers. In turn it may then progress towards Extended Enterprise.

2.4.3. Evolution of Enterprise Resource Planning (ERP)

The introduction of Manufacturing Resources Planning (MRP II) is the result of an evolutionary process based upon Material Requirements Planning (MRP). MRP was introduced at the end of the sixties (Orlicky, 1975; Fogarty et al 1991).

The concept was based on two principles. Firstly, MRP relies on the usage of time-phased information in calculating orders for material requirements and scheduled work. The limited capabilities of computing power at the time made the systematic use of this time-phased representation difficult, expensive and time consuming. Secondly, MRP uses the Bill of Material (BOM) generated by the design department to provide details of components for every product. Therefore, it also requires extensive computing power.

The rapid development of computing and computer technology and the introduction of on-line processing have had a major impact on enterprise applications such as sales order entry and invoicing. Computing applications such as database have also become well developed. The combination of these advances in systems and technology has created a modern business information system, which is known as Manufacturing Resource Planning (MRP II). MRP II being referred to as "closed-loop MRP" (Wong and Kleiner 2001).

From an enterprise-wide integration perspective this may be classified as partial integration between the sub-systems of a manufacturing enterprise. Yusuf (1996) argued that MRP II may turn into an isolated planning and scheduling system, without the provision of logical links to quality and design.

Therefore, the implementation of an MRP II system on its own may not reach its ultimate potential benefit as an enterprise-wide system integrator, not to mention its limitations in the context of extended Supply-Chain framework.

Enterprise Resource Planning (ERP) is frequently claimed by vendors as a tool, which extends the MRP II concept to all the integrated enterprise's functions (Wortmann, 1998), such as Business Operation, Engineering, Manufacturing, Production Planning, Plant Operations, and Distribution, into a single database.

This tool may also be used to forecast sales, analyse data, and plan production. It is ultimately meant to integrate enterprise data into a common and manageable

platform so that each and every function within an enterprise will share the same and up-to-date version information. In this way it is claimed to have taken manufacturing management closer to the CIM concept.

2.4.4. The Role of Concurrent Engineering (CE) within CIM

The product development cycle usually begins with the conception of product need based on market analysis, or alternatively may arise through the research and development process identifying an opportunity.

Traditionally, a series of sequential steps have been pursued. The sequence begins with product design, and then continuing with process planning, procurement, manufacturing and distribution.

However, it has been widely recognised that design decisions made early in the product development cycle have a significant effect on the manufacturability, quality and cost of a product, which in turn, will have a direct impact on the ultimate marketplace success of the product itself (Halevi, 1994).

Siegal (1991) believes that the cost of Engineering Change Orders (ECOs) increases logarithmically as the orders are placed later in the product's life cycle. It means that the product designer must include manufacturing considerations as early as possible together with the structural, functional, and aesthetic requirements of the product.

Hence, all organisation-wide information should be used to enhance the design information used to arrive at the finalised product design for manufacture. Therefore, CE (sometimes referred to as Simultaneous Engineering (SE)) may be seen as an effective approach to product development. It focuses on parallel as opposed to sequential interaction in the product development process. In turn it reduces product lead time while at the same time improving performance with respect to design for economic manufacture and maintainability.

Concurrent Engineering (CE) has played a key role in Computer Integrated Manufacturing. CIM and CE are multi-disciplinary approaches, and the latter may be viewed as an integral element of CIM. It is concerned with providing computer assistance to ensure a high level of integrated communication at all levels. This is done basically by linking islands of automation into a distributed information processing system. This could be described as the application of the principles of BPR to the new product introduction process.

According to Ranky (1994) the technology applied in CIM and CE makes intensive use of distributed computer networks and data processing techniques, artificial intelligence and database management systems.

Therefore, Concurrent Engineering may also be seen as a systematic approach to the integrated, concurrent design of products and their related processes, including manufacture and support. This approach is intended to cause designers to consider all elements of the product life cycle from conception through to disposal, including quality, cost schedule and user requirements from the beginning.

Hence, the purpose of Concurrent Engineering (Ranky, 1994) is to:

- Increase productivity.
- Create products that are:
  - Of high quality,
  - Reliable.

Therefore, the focus of CE is to address important issues simultaneously, such as:

- Functionality,
- Reliability,
- Produceability, and marketability concerns,
- Reduction of the product development time (i.e. lead time) and cost,
- Achieving higher product quality and value.

A key issue is that Computer Integrated Manufacturing Enterprise (CIME) architecture must take into account the flow of information and materials, as well as other processes, seeing them as an integrated process.

There are three vital points to recognise in this context (Ranky, 1994):

1. Design is the first step in product manufacture.

2. Every important design decision must be considered with great care at the earliest stage by a team of:
   - Designers,
   - Manufacturing engineering which includes procurement and,
   - Marketing experts,
   - Quality and maintenance engineers,
   - Key customers.

3. Product design needs careful analysis and "fine tuning" to take advantage of the available and skilfully applied CIM methods and technologies (i.e. CAD, CE, cellular manufacturing systems, FMS, new processes, etc.)

The Ford Motor Company provides a good example of CE; during the design of the Taurus, Design Engineers at Ford embarked on a new approach following their substantial losses in the early 1980s.

They studied customer needs and made quality the number one priority. They departed from their traditional, sequential approach and brought together representatives from each potential group involved in the process into a team. Ford suppliers were taken into the design process and were given long-term contracts and invited to have input on product design and planning. As a result from this approach the Ford Taurus was named as one of the world's ten best cars in three consecutive years, 1986, 1987, and 1988.

However, in practice CE is actually quite difficult to apply, especially for large lead-time development products. The difficulty lies in the quantity of different technical and managerial problems involved in the design, manufacturing and assembly processes (Elejabarrieta, 1996).

Therefore, it is difficult for team working to take place when there are no clear savings in both individual and global dedicated time. The reason is because sequence is generally the most natural way of doing jobs for individual's comfort and time optimisation.

Nevertheless CE is a well-researched concept and many organisations have currently taken it to the heart of their activity. However, most literature addresses CE in the context of an internal enterprise's resources and activity. Within EE environment, CE must be applied across all the resources and activities of members of EE.

2.4.5. Supply-Chain Management (SCM)

Davis (1993) claimed that the main advantage earned by a company successful in Supply-Chain Management, is reduced uncertainty throughout the Supply-Chain, with all of the associated operational benefits. Singh (1996) argued that mass customisation of products needs much more than manufacturing integration, it also requires the formation of "virtual organisations" to tackle specific projects or market niches. He goes on saying that enterprise-wide integration (EWI) is required to ensure that all the technical and administrative units can work in unison.

However, the most common obstacles of these concepts often come not from technological aspects but rather on the managerial and organisational issues, people attitudes and cultural differences between the organisations.

These issues need to be addressed in order to improve suppliers' and customers' relationships within manufacturing industries. It means the emphasis should be more in terms of strategy and systems of manufacturing integration, rather than in terms of purely technological aspects.

The "latest" approach towards closer supplier-customer relationship is the "Advanced Supplier Partnership" concept introduced by Williams (1999) from AT&T. This concept is based on effective materials management coupled with price adjustment provision systems, agreed in advance between suppliers and customer. It needs a lot of trust, risk sharing and lengthy and complicated legal procedures. In the end the main objective of this partnership is reduction in inventory and cost.

The limitation of this approach is that it is only applicable to a particular and highly specialised hi-tech product, where virtually no competition between suppliers exists. Hence, it is difficult to view this as a truly generic concept.

This research aims to identify a concept that is generic and may be applied across a broader spectrum of manufacturing activities and organisations.

Therefore, the approach should be divided into 2 parts.

Firstly, a strategic-approach, which is primarily based around core competence, goal integration and agility as the main drivers. Hence, these drivers may be seen as the "needs" for manufacturing organisations.

Secondly, the organisational-approach, which will provide the mechanism and structure to support and encourage implementation of Extended Enterprise concept.

The supplier customer partnership has been focused initially only around logistics and inventory issues. The Supply-Chain Management concept was primarily introduced to deal with these issues. This is then developed further to involve other issues such as accounting and finance, engineering design, production planning and so on. It is therefore also important to identify other characteristics of this partnership.

One way to find out is by looking at it from the customer's point of view. It is understood that a customer's decision on selecting suppliers/sub-contractors is usually based on certain criteria:

- Shortest lead time,
- Cheapest price,
- Highest quality product/service,
- Reliable products,
- Best technical support, etc.

Essentially SCM is a term originally and increasingly used by logistics professionals. It encompasses every aspect involved in producing and delivering a final product from the supplier's supplier to the customer's customer. According to the Supply-Chain Council Ltd. (1999), SCM consists of four basic processes, Plan, Source, Make, and Deliver.

Basically, it covers managing supply and demand, sourcing raw materials and parts, manufacturing and assembly, warehousing and inventory tracking, order entry and order management, distribution across all channels, and delivery to the customer. It goes on to say that because of its wide scope, SCM must address complex interdependencies, in effect creating an "Extended Enterprise (EE)" that reaches far beyond the factory door.

The rapid development and deployment of information and computing technology (ICT) has had a significant impact on this concept. Discussion on how ICT enables supply-chain integration follows in the next section.

2.4.6. ICT enabled Supply-Chain Integration

Becker and Keegan (1998) stated that over the past 40 years, four distinct waves of computing technology have swept through industry, transforming the way manufacturing and service companies conduct business. These waves have radically transformed the Supply-Chains that link raw-material providers, manufacturers, and end-users or customers.

The "first wave" of computing technology from 1960 to 1970 was based on mainframe computers. These mainframe computers coupled with business applications such as Materials Requirements Planning (MRP) and Manufacturing Resource Planning (MRP II) allowed companies to standardise the tasks that many employees performed.

The "second wave" was based on the development of personal computers (PC) from 1970 to 1980. The PC and its related applications such as word processors, spreadsheets and presentation software have supported improvements in the business environment by making it easier to communicate ideas across functional boundaries leading to improved integration within the plant. Consequently, it allowed companies to focus on the development of cross-functional business processes that leveraged the functional improvements of the "first wave".

The "third wave", from the middle of 1980s, was based on network computing and continues to have a major effect on how companies conduct business today. Many companies are using network computing, client/server applications and e-commerce to achieve economies of scale in managing information and transactions, as well as leveraging the efficiencies of functional expertise in the "first wave" and cross functional business processes in the "second wave".

The "fourth wave" is based on Internet working. This breaks down another major barrier to better operational performance. The main objective being that it encourages businesses to consider their Supply-Chains as a portfolio of competencies in which they manage process performance. By fostering better communications and interchange of information between enterprises, this wave will enable fully integrated business processes. Furthermore, they argued that Electronic Commerce (EC) is a means of achieving higher levels of performance across entire supply-chains, stretching from the supplier's supplier to the customer's customer.

However, Clark (1997) argued, when giving comments on the Supply-Chain surveys in 1997, that there are still many businesses where "logistics" and "supply-chain" are

not in everyday parlance, or even on the business agenda. It implies that inter-enterprise partnership is not just logistics or supply-chain based, it needs to go beyond these concepts.

2.4.7. Extended Enterprise

Boykin (1997) suggests that in the 21st century, the most critical element to business success is going to be strength and alignment of all supply-chain partners within Extended Enterprise. Therefore, this thesis needs to address these relationships, which will include external entities to an enterprise, i.e. suppliers, sub-contractors, partners, and customers' relationships, within a context of Extended Enterprise.

Jagdev and Browne (1998) suggest that if an enterprise has made certain commitments to other enterprises to operate in Extended Enterprise mode, its commitments to collaboration are solely limited to the contractual terms agreed to in advance. It, therefore, does not restrict the enterprise operating within EE to engage in other operations, which include making similar arrangements with other enterprises that are not in the original chain. This kind of relationship may be seen as project based.

In order to capture a complete view of Extended Enterprise, a structured approach is needed. It is proposed that this approach be in the form of a generic model, so that it may be developed or adopted further for a particular enterprise.

This thesis will provide a reference model and will suggest a strategic planning procedure to support progress towards EE. Hence, an inter-enterprise integration beyond that of supply-chain integration may be developed.

2.5. Key Issues for EE Drawn from Published Research

It has been indicated previously in the review that prior to the 1990s information system management had been focused on stand-alone plants and isolated functions. Managers tended to provide individual solutions to common problems. Business Process Re-engineering has been introduced to improve processes across the whole

business units and there had been an attempt to create cross-functional process integration. However, organisational boundaries still existed between enterprises.

The introduction of industrial standard ERP software such as SAP, BAAN, etc. has helped many enterprises to gain some cross-functional process integration within their organisation (Sweet, 2001). In the late 1990s other "external entities" such as suppliers, customers, partners, and sub-contractors are included into the model. Hence, it may appear that the movement towards a closer collaboration and integration within and between enterprises is one of the most important issues of modern manufacturing businesses.

Sehdev, et al (1995) stated that participants in EE are classified into product owner and the supplying partners. They go on to say that the significance of EE concept, as distinct from the conventional sub-contracting relationship, is in the extent of information flows that facilitate the tightening of manufacturing design and production. Therefore, the running of the enterprise is extended to all partners involved in the production programme. This closer collaboration between enterprises may be termed Extended Enterprise (EE).

One of the key issues for EE could be a trend towards identifying suppliers before designing component parts to be supplied. Concurrent Engineering (CE) input to a product requires trust and collaboration in terms of confidentiality and subsequent cost negotiations with the suppliers. EE goes far beyond these two very important and crucial issues to enterprise partnership. It also requires a mechanism that will enable members of EE to form strategic collaboration.

Hence, key issues for EE to succeed in modern manufacturing business have been identified as:

- **Goal Integration.** EE should have the attribute of integration at the strategic/business level since it has been recognised as the "highest level" of integration (section 1.1 and section 2.1).

- **Shared resources.** It has been indicated that collaboration will result in sharing and distributing manufacturing resources (section 2.4.1). This may also include sharing information, markets, and inevitably sharing risks as well as profits.

- **Agility.** Ability to respond quickly and effectively to changes/opportunities/threats within the market place has been identified as a primary requirement for competition in today's markets. Hence for EE to be agile in terms of its response there is a need for the organisation structure of EE to be flexible/adaptable (section 1.1 and section 2.1)

- **Project Based.** Jagdev and Browne (1998) suggest that if an enterprise has made certain commitments to other enterprises to operate in Extended Enterprise mode, its commitments to collaboration are solely limited to the contractual terms agreed to in advance (section 2.4.7).

  This would support the suggestion of Skyrme (1996), when describing the nature of virtual enterprise, he stated that the relationship might reshape and change members according to the project or task in hand. This may imply that organisation structures for EE will primarily be "project oriented". This requirement for management of a dynamic portfolio of projects is consistent with the concept of EE. This also fits with the concept of "programme management". The collaboration has a high degree of agility and is flexible in that when it is not required it may be dissolved. However, longer-term relationship is the ultimate objective of EE.

- **Focus on core competence.** It has been stated in section 1.2 that one of the effects of Business Process Re-engineering has been a move towards an increased emphasis on core competence and hence, greater use of sub-contractors/ partners. Each member of EE must focus on its own core competence and be ready to relinquish it when necessary in the overall interest of EE.

- **Independent Company.** Jagdev and Browne (1998) argue that Virtual Enterprise is a temporary network of independent companies, even erstwhile competitors, who come together to exploit fast-changing opportunities. They carry on to say that Extended Enterprises can be considered as a special case (and a subset) of Virtual Enterprise. It follows that members of EE remain independent companies.

- **Trust.** Collaboration must be based on trust. Due to the fact that close collaboration may lead to sharing of an enterprise's confidential information, each and every member must trust others and vice versa for EE to operate.

- **Distribution of capacity.** The sharing of capacity among members is one of the potential features to operate EE. This would offer a greater efficiency than would be possible at the member level, given a required standard of customer service.

- **Joint New Product Development.** This may be regarded as the deployment of best practice with respect to Concurrent Engineering (CE), while taking into account the shared goals of EE. The resulting more efficient use of resources may lead to more effective design, shorter lead-times and more effective product support.

CHAPTER THREE

REVIEW AND ANALYSIS OF CURRENT PRACTICE

3.1. Introduction

This Chapter examines current practice in supply-chain relationships within the context of Extended Enterprise and is divided into three parts.

The first part covers the development, distribution, and analysis of the questionnaire, the second part details a series of semi-structured interviews, and the third part reports the undertaking of a series of case studies.

The extensive review of published research in Chapter Two identified a number of "key issues" for effective operation of EE. The questionnaire was developed to provide some further insight into the extent to which these issues are being addressed currently by manufacturing organisations. The questionnaire and more detailed "semi-structured interviews" were intended to enhance the author's understanding of more practical aspects of EE and were not intended to provide formal statistical evidence. Given that EE is a relatively new concept it appeared more appropriate to emphasise the evidence, which would be provided by close study of case companies.

Questionnaire

While the questionnaire was not directed specifically at companies involved in the manufacture of discrete "metallic products" it was envisaged that this sector would provide the greatest number of respondents. Hence, the questionnaire and semi-structured interviews made specific reference to aspects of CIM, appropriate to that

sector. Respondents from other sectors were expected to disregard these issues or interpret them accordingly.

Given the traditional difficulty in gaining satisfactorily response to questionnaires it was decided to adopt a more pragmatic approach and to direct them through a network of favourable contacts, rather than to target specific industry sectors. The "Indonesian Chamber of Industry and Commerce" and the University of Huddersfield SME Support Network and "external relations" databases provided the primary sets of contacts. Details of the distribution of the response are provided in section 3.2.

The responses were primarily from companies involved in the manufacturing of metallic products and it may be that some bias with respect to these sectors is, therefore, present in the analysis. While this is accepted, it was felt that this would affect only the position of companies with respect to an idealised reference model of EE, rather than the structure of the model itself. It may be argued also that an element of bias is associated with basing the review upon two countries only i.e. Indonesia and U.K., given the cultural differences, which exist, between countries. However it was not envisaged that cultural differences between countries would have a significant effect on the structure of an idealised model of EE; differences would be more likely to have an effect on ability to progress to EE.

The objective of the questionnaire was to gather more detailed information and insight with respect to current supply-chain practice. The questionnaire was divided into 5 parts.

Part A of the questionnaire examines the general company profile of the responding companies.

Part B attempts to identify the general relationship between the respondent and its supply-chain. In particular it tries to identify the extent to which the relationships have been developed further than the simple supplier-customer relationship.

Part C aims to identify current internal relationships with respect to the use of computer-based technology in relation to enterprise infrastructure, e.g. the utilisation of CAD/CAM, CAE, CNC, DNC, MRP/MRP II/ERP software and hardware as highlighted by Yusuf and Little (1998). The rapid development and deployment of new information technology systems particularly the Internet, Intranet, and Extranet, appears likely to be one of the enablers of enhanced supply-chain relationships.

Part D of the questionnaire deals with CIM external functions and relationships, including integration with suppliers, sub-contractors, partners, and customers. The aim is to find out the current level of integration, and to compare this with the view of Case Companies towards implementation of such integration with respect to rapid development of networking systems and technology. Also, this section means to identify the major enablers as well as barriers to integration within current supply-chain practice.

The last part of the questionnaire (Part E) is to provide details of the person responding to the questionnaire.

Questionnaires were distributed to seventy-five companies in the UK and seventy-five companies in Indonesia. The following section provides analysis of the questionnaire results. From the total of one hundred and fifty questionnaires distributed, twenty-four sets from UK and forty sets from Indonesia made up a total of sixty-four sets were completed and returned. Mainly senior managers or appropriate "decision-makers" completed the questionnaires.

A sample of the questionnaire is provided in appendix 1.

3.2. Questionnaire Analysis

The questionnaires were distributed to nine sub-sectors of the International Standard Industrial Classification of all economic activities (ISIC Rev.3, 1989) for all economic activities. Responses were obtained from the textile, paper, chemical, non-metallic, basic metal and metallic product sectors. The respondents were primarily

from the metallic product sub-sectors. Table 3.1 shows that 62.5% of respondents are from metallic product industries and 18.8% are from basic metal industries.

Sub-sector	No. of respondents	Percentage
Textile	2	3.1%
Paper	2	3.1%
Chemical	5	7.8%
Non Metallic	3	4.7%
Basic Metal	12	18.8%
Metallic Product	40	62.5%

Table 3.1: Respondent by sub-sector

The profile of the respondents in terms of the number of employees in the organisation is given in tables 3.2.

No. of employees	No. of respondents	Percentage
1 – 9	13	20.3%
10 – 99	29	45.3%
100 – 249	15	23.4%
250 – 499	3	4.7%
More than 500	4	6.3%

Table 3.2: The number of employees by respondent

From table 3.2 it can be noted that the majority (73.4%) of these companies fall into the category of Small and Medium size Enterprises (SMEs), i.e. companies having between 10 and 499 employees (Robert, 1997). As this is the most common size of company, the distribution appears appropriate. The SME population have shown particular interest in the survey.

The survey also reveals that most of these companies (92.2%) are operating with turnover of less than £10 m. There are 29 companies (45.3%) having the annual turnover of less than £ 1m and 30 companies (46.9%) having an annual turnover amid £1m to £10m (table 3.3). Only 5 companies (7.8%) of the respondents have turnover of more than £10 m.

Annual turnover	No. of respondents	Percentage
Up to £ 1.0 m	29	45.3%
£ 1.0 m – £ 10.0 m	30	46.9%
More than £ 10 m	5	7.8%

Table 3.3: The annual turnover by respondent

Smeltzer (2001) suggests SMEs simply do not have the budget, staff or expertise to implement the "costly technology". He goes on to say that the most viable approach seems to be technology delivered by a third party, with a subscription-based model using predictable monthly fees. This way the third party provides the infrastructure. The primary investment is transferred to another party but the SME obtains the primary benefits and the large enterprise becomes connected to SMEs.

Limited resources (human and financial resources) appear to lead many of these enterprises to concentrate primarily on specific (core) competencies. Consequently, such companies often have a considerable proportion of their product cost contributed by suppliers/sub-contractors. The survey into manufacturing industries appears to support this assumption. Table 3.4 shows that 85.9% of the respondents' claim that their suppliers/sub-contractors contribute between 25% up to 50% of their product cost. This implies that these companies have a high dependency on their suppliers, sub-contractors, and partners.

Suppliers contribution to product cost	No. of respondents	Percentage
Less than 5%	2	3.1%
5 – 10%	2	3.1%
10 – 25%	4	6.3%
25 – 50%	55	85.9%
More than 50%	1	1.6%

Table 3.4: Contribution by suppliers to product cost

Higher dependency on suppliers, sub-contractors, and partners also appears to be one of the characteristics of SMEs. This assumption is supported by the fact shown in table 3.2 that the majority (73.4%) of respondents may be categorised as SME.

In turn this situation may drive them to build a closer and better relationship with them. Without such a relationship it may lead them to jeopardise their overall manufacturing capacity, capability and performance.

Indeed there are a number of approaches undertaken in order to improve this supplier–customer relationship, i.e. Supply-Chain Management (SCM), Enterprise Wide Integration (EWI), Integrated Logistics, etc. The emphasis of most of these approaches lies on improved communication systems and management between suppliers and customers utilising the latest developments in computer systems and technology.

However, the concern is how such companies, due to the nature of their businesses, may not have "logistics" and supply-chain" in their every day parlance. Therefore, there is a need to extend the idea and come out with a "new" approach, which will cover those practices as well.

Suppliers contribution

Discussion or exchange of information regarding technical issues between supplier and customer and/or partners is an emerging and growing phenomenon within modern manufacturing organisations. In the past many organisations tended to operate very much within a "closed" system.

Suppliers or sub-contractors were often treated badly and this sometimes resulted in broken relationships. Poor supplier-customer relationships often led to poor performance with respect to customer service, especially when the degree of dependability on the suppliers and partners is very high.

Poor suppliers were identified as a problem area for production scheduling (Halsall, et al.1992). Therefore, where the contribution of the suppliers and partners is significant, the host or Primary Company is vulnerable. The survey supports this view, as may be seen on Table 3.5, where 71.9% of respondents believe that late delivery by suppliers has led to poor performance with respect to customer service.

Late delivery leads to poor performance	No. of respondents	Percentage
Rarely	7	10.9%
Occasionally	46	71.9%
Frequently	11	17.2%
Very Frequently	0	0%

Table 3.5: Late delivery by suppliers

Trust and shared risk

The majority of companies claimed that they share technical information but when it comes to sharing detailed information, especially regarding engineering design specification, they seem to be reluctant to be open.

This may be seen from their answer to the question regarding implementing a common database, where 84.4% of respondents claimed they have not considered using a common database with their suppliers or customers, whereas only 15.6% claimed otherwise (table 3.6).

Consideration to use Common database	No. of respondents	Percentage
Yes	10	15.6%
No	54	84.4%

Table 3.6: Consideration to use common database

Criteria for selecting suppliers

Most companies still follow a conventional approach when they are choosing suppliers and sub-contractors. Typically, companies look at the following well-accepted criteria:

- Lowest in price
- Shortest lead time
- High quality products/services

The survey reveals that high quality products/service was regarded as a key feature for 84.4% of respondents, whereas lowest prices were seen as a key feature by only 26.6% of respondents (table 3.7). However, the survey also tells that there have been significant changes in those attitudes.

A large proportion of respondents (70.3%) claimed that product reliability and technical support are the two most important factors when choosing their suppliers and sub-contractors. This may imply that those companies need more involvement of their respective suppliers and sub-contractors, i.e. by providing them with necessary technical back up to ensure product reliability. Table 3.7 shows the most important factors in choosing suppliers and sub-contractors.

Criterion	No. of respondents	Percentage
High quality products/services	54	84.4%
Reliable products	45	70.3%
Best technical supports	45	70.3%
Shortest lead time	18	28.1%
Cheapest in price	17	26.6%

Table 3.7: Important Factors in choosing suppliers/sub-contractors

Sharing of technical/product information

90.6% of respondents claimed that they have regular technical meetings with their suppliers and sub-contractors (table 3.8).

Most of them (37.5%) said that they supply technical information to their suppliers and sub-contractors while 31.3% of them indicated that they discuss their capacity planning with them. However it is difficult to establish if these technical meetings have yet reached the ideal level of information sharing. It appears that the technical meetings conducted are mainly limited to product technical specifications and after sales service.

Communication with suppliers/sub-contractors	No. of respondents	Percentage
Regular technical meeting	58	90.6%
Engineering/technical information	24	37.5%
Discuss capacity planning	20	31.3%

Table 3.8: Technical Discussion with Suppliers

Communications

The development and advancement of information systems and technology might be expected to have enhanced communication systems between suppliers and customers/partners. However, the survey shows that the majority of organisations are

still frequently using telephone (98.4%) and facsimile (96.9%) with 73.4% claiming to have frequently used intranet/internet/email. Even more interestingly, 17.2% of the respondents claimed that they have never used email (table 3.9).

Type of communications	No. of respondents	Percentage
Phone	63	98.4%
Facsimile	62	96.9%
Internet/intranet/email	47	73.4%
Never use email	11	17.2%

Table 3.9: Communications with suppliers/customers

This may imply that there is a need to share technology-based information and communication between suppliers and customers.

There may be a number of reasons to explain this situation:

- Lack of support from the top management which in turns results in lack of company's strategy to implement such technology
- Lack of in-house expertise and experience in these areas
- Migrating data into a new system usually causes some productivity losses
- Cost involved to utilise such system has not been justified
- Slowness of company as a whole in anticipating development in information and communication systems and technology
- Resistance to change by the work force and/or their management

It may then be argued that in today's environment e-commerce/e-business strategy together with hard and soft systems are major indicators and enablers for Extended Enterprise.

Technology and Innovation

It may be argued that innovation comes from a Company's research and development activities. It may also come from entities outside the Company's boundaries, such as suppliers, sub-contractors, customers or even competitors.

These two issues, i.e. technology and innovation are likely to be closely linked within EE. This is due to the fact that members within EE work closely together to share product development tasks, share marketing strategies, and share risks.

Company's goal and objective

Most companies' goals and objectives are reflected by their "order winning criteria". When the companies were asked about their respective order winning criteria, most of them (36.0%) responded with quality as the main winning criterion. This is shown in table 3.10.

Given that it has been accepted as a common practice that quality is normally built into each process involved, it may be argued that these companies are still concentrating on a rather "conventional" paradigm. However, it may also mean they believe that their companies must put quality as priority number one in order to win the market competition.

The second order winning criterion is price. This is a common procedure within business practice that the nature is to buy highest quality products yet seek for the cheapest in price. However, when the market has become saturated it may be argued that these two criteria will have no direct significant impact on business, since every enterprise is expected to comply.

The three common criteria of quality, price, and delivery are regarded as the top of the list of order winning criteria, while only less than 15.6% of respondents considering reliability and after sales service as their order winning criteria.

It could be argued that reliability and after sales service are parts of the quality issue. But it may also reflect that the business culture is still very much focusing only on their own internal abilities, hence not seeing it from the total product life-cycle which will eventually involve their external entities such as suppliers, sub-contractors, partners and customers.

Order Winning Criterion	No. of respondents	Percentage
Quality	23	36.0%
Price	15	23.4%
Delivery	11	17.2%
Reliability	5	7.8%
After sales services	10	15.6%

Table 3.10: Winning Criteria

Rapid development and deployment of new information technology systems that go beyond local computer networking, i.e. Local Area Networking (LAN), particularly the Internet, Intranet, and Extranet, appears to be one of the enablers of enhanced supply-chain relationships. In addition, the use of computer-based technology in relation to enterprise automation infrastructure, e.g. the utilisation of computer-based applications such as CAD/CAM, CAE, CNC, DNC, MRP/MRP II/ERP software and hardware as highlighted by Yusuf and Little (1998) may be seen as the tools towards closer partnership. Figure 3.11 illustrates computer-based applications currently used by the respondents.

Computer-based applications	Number of respondents	Percentage
CAD/CAM	8	12. 5%
CAE (Finite Element Analysis)	1	1.6 %
NC/CNC/DNC	2	3.2.%
CAPP (Computer Aided Process Planning)	1	1.6 %
MRP/MRP II	5	7.8 %
ERP	4	6.2 %
Product Data Management (PDM)	6	9.4 %
E-mail	17	26.5 %
Internet/Intranet	15	23.4 %
Computer networks - LANs	4	6.2 %
Project Management Software	1	1.6 %

Table 3.11: Computer-based applications

It may be noted that the use of email, internet/intranet and CAD/CAM are the top three computer-based applications claimed to have been used by 62.4 % of respondents. This appears to show that such applications may have been viewed as part of essential elements towards the deployment of a new information technology, which form a key feature for the closer collaboration and integration within and between enterprises.

The objective of computer-based application has been addressed by 23.4 % of respondents as a means to manage project planning and scheduling, whereas 15.6 % of respondents claim that it is to speed-up design and drafting and, exactly the same number of respondents, claim to use it to improve communications (figure 3.12). Hence, it may be seen that the use of computer-based application, which may be viewed as essential elements or sub-systems of CIM, are mostly aimed at automation process and improvement of communication. These sub-systems are often designed and operated in isolation and result in what have been called "islands of automation" (section 1.1.).

The objectives of computer-based applications	Number of respondents	Percentage
To speed-up engineering design & drafting	10	15.6 %
To control machinery/ machine tools	11	17.1 %
To improve communications	10	15.6 %
To assist quality control process	3	4.7 %
To assist production control	4	6.3 %
To manage project planning & scheduling	15	23.4 %
Concurrent engineering	4	6.3 %
To achieve higher flexibility	3	4.7 %
To rationalise/standardise components	4	6.3 %

Table 3.12: The objectives of computer-based application

CIM Implementation

Table 3.13 illustrates the integration of CIM elements with other elements within the Company. CAD/CAM integration was claimed by 20.3 % of respondents, while office administration tools, Project Management and MRP/MRP II/ERP are each claimed by 15.6 % respondents.

This may reflect that most of the respondents were in the initial phase of integrating computer-based application processes. They were concerned with the interconnection of manufacturing automation and data processing facilities, e.g. between CAD, CAM, and Production Planning and Scheduling (PPS), to permit the interchange of information between islands of automation (section 1.1).

Integrated CIM elements	Number of respondents	Percentages
CAD/CAM	13	20.3 %
CAE (Finite Element Analysis)	1	1.6 %
CAD/CAE/CAM	1	1.6 %
CNC/DNC Machines	5	7.8 %
Office administration tools	10	15.6 %
Product Data Management	5	7.8 %
Project Management	10	15.6 %
Document Management	3	4.7 %
MRP/MRPII/ERP	10	15.6 %
Quality Assurance System	3	4.7 %
Workflow Management	3	4.7 %

Table 3.13: Integrated CIM elements

Table 3.14 illustrates that information and communication system is a major benefit of CIM. It was claimed by a large proportion of respondents (71.8 %). This may further be broken down into 4 groups:

- Improved quality and control of information (23.4 %)
- Better communication amongst functions (20.3 %)
- Faster access and retrieval of correct information (15.6 %)
- More effective communication with suppliers (12.5 %)

Taking into account that 74 % of the respondents may be categorised as SME (table 3.3), it may indicate that CIM was viewed as a means to improve information and communication within functions by most SMEs. It may be worth noting that 12.5 % of them claimed that CIM implementation includes more effective communication with suppliers.

Benefits of CIM	Number of respondents	Percentage
Shorter product lead-times	9	14.1 %
Improved quality and control of information	15	23.4 %
Faster access and retrieval of correct information	10	15.6 %
Better communication amongst functions	13	20.3 %
More effective communication with suppliers	8	12.5 %
Reduced unproductive effort in support areas	9	14.1 %

Table 3.14: The benefit of CIM implementation

Table 3.15 shows that 29.7 % of the respondents claimed their overall performance was improved considerably due to CIM implementation. Slightly less than half of the respondents (45.3 %) claimed that implementation of CIM elements improved their overall performance moderately. Only 25 % of them stated that the CIM implementation did not give them any improvement in their overall performance.

Improved overall performance of CIM elements implementation	Number of respondents	Percentage
Considerably	19	29.7 %
Moderately	29	45.3 %
None	16	25.0 %

Table 3.15: Improved overall performance due to CIM elements implementation

Table 3.16 illustrates that the majority of the respondents (84.4 %) claimed they had not interfaced their CIM elements with their suppliers, sub-contractors and customers. It is interesting to note that 10 respondents (15.6 %) claimed that they had interfaced their CIM elements with key partners, while table 3.14 shows that only 8 respondents claimed CIM implementation gave a more effective communication with their suppliers.

Therefore, it may suggest that out of 10 respondents, only 8 of them found a direct benefit to interface their CIM elements with their key partners. This 80 % success rate is more or less consistent with table 3.15, which shows 75 % of respondents claimed an improved overall performance with respect to CIM implementation.

The interfacing of CIM elements with key partners	Number of respondents	Percentage
Yes	10	15.6 %
No	54	84.4 %

Table 3.16: Interfacing CIM elements with key partners

Table 3.17 shows that 4 respondents claimed to have interfaced their CAD/CAM with those of key partners. Office administration, PDM and Project Management are CIM elements, which were each claimed by 2 respondents, to have been interfaced with those of key partners.

This appears to suggest that these companies have the intention and ability to link-up their engineering data as well as "administrative" data. However, as far as CAD/CAM data as concerned, there is a need to either have a common CAD/CAM system in place or a standard CAD/CAM data exchange system.

CIM elements	Number of respondents	Percentage
CAD/CAM	4	40 %
CAE (Finite Element Analysis)	0	0 %
CAD/CAE/CAM	0	0 %
CNC/DNC Machines	0	0 %
Office Administration	2	20 %
Product Data Management (PDM)	2	20 %
Project Management	2	20 %
Document Management	0	0 %
MRP/MRPII/ERP	0	0 %
Quality assurance system	0	0 %
Workflow Management	0	0 %

Table 3.17: CIM elements interfaced with key partners

The majority of the respondents (68.8 %) are not sure whether to integrate their CIM elements with those of their partners (table 3.18). This may be due to the fact that they have just viewed CIM as an internal "integration" tool, which focuses on improved quality and control of information amongst functions (table 3.14), rather than an integration tool between organisations.

The need to integrate CIM elements	Number of respondents	Percentage
Yes	17	26.5 %
No	3	4.7 %
Not sure	44	68.8 %

Table 3.18: The need of strategy and system for CIM integration

IT Elements and Supply chain Integration

Around 90 % of the respondents view the use of Internet/intranet, email and inventory management as important and even very important with respect to supply-chain integration (table 3.19). However, around 20 % of the respondents do not even know about EDI, EPOS or inventory management integration. 50 % of respondents regard that EPOS is not important with respect to its supply-chain integration. This may be because the nature of their business does not require such an application to be implemented.

IT elements for S-C integration	Number of respondents			
	Very Important	Important	Not Important	Do not Know
Electronic Data Interchange (EDI)	9 (14.1%)	28 (43.7%)	9 (14.1%)	18 (28.1%)
Electronic Point of Sales (EPOS)	11 (17.2%)	6 (9.3%)	32 (50.0%)	15 (23.5%)
Internet/Intranet	32 (50.0%)	29 (45.3%)	3 (4.7%)	0 (0%)
Email	37 (57.8%)	24 (37.5%)	3 (4.7%)	0 (0%)
Inventory Management Integration	32 (50.0%)	17 (26.6%)	7 (10.9%)	8 (12.5%)

Table 3.19: The importance of IT elements for supply-chain integration

Integration with key partners, i.e. suppliers and customers has been viewed positively by 90 % of the respondents as important or even very important (table 3.20). Only 4 respondents stated that they viewed it as not an important issue. But again, the nature of business of these companies may not be requiring such integration with their suppliers or customers.

The importance of integration with key partners	Number of respondents	Percentage
Very Important	35	54.7 %
Important	23	35.9 %
Not Important	4	6.2 %
Do not know	2	3.2 %

Table 3.20: The importance of integration with key partners

No respondents are aware of the concept of "goal integration" (table 3.21 and 3.22). Therefore, introducing such a concept may provide a "new" point of view for practitioners in this area. However, when asked about technical integration and process integration the response was as illustrated in table 3.22 where 67.2 % of respondents claimed that they instigate technical integration while the rest (32.8 %) exercise process integration.

Goal Integration Concept	Number of respondents	Percentage
Yes	0	0 %
No	64	100 %

Table 3.21: The concept of Goal Integration

The types of integration	Number of respondents	Percentage
Technical Integration	43	67.2 %
Process Integration	21	32.8 %
Goal Integration	0	0 %

Table 3.22: The types of integration

Table 3.23 illustrates these barriers to supply-chain integration. Lack of co-operation from partners and lack of support from top management together accounted for more than 80 % of respondents towards the barriers to supply-chain integration. These two typical major barriers need to be lifted if EE is to succeed.

Barriers to S-C Integration	Number of respondents	Percentage
Lack of co-operation from partners	26	40.6 %
Lack of support from top management	26	40.6 %
Lack of tangible benefits identified	5	7.8 %
Lack of perceived benefits	6	9.4 %
No relevance to our industry	1	1.6 %

Table 3.23: Barriers to S-C integration

It has been indicated that collaboration will result in sharing and distributing manufacturing resources (section 2.4.1). This may also include sharing information, markets, and inevitably sharing risks as well as profits (section 2.5). Table 3.24 illustrates the response given by the respondents with regard to exchange of information with key partners.

The reasons to exchange information	Number of respondents	Percentage
Pressure from customers	13	20.3 %
Pressure from suppliers	5	7.8 %
Technology becomes available	23	36.0 %
Perceived benefits for ourselves	18	28.1 %
Do not know	5	7.8 %

Table 3.24: The reasons to exchange information with key partners

It may be noted that majority of the respondents (36 %) admitted that they share or exchange information since the technology becomes available and 20.3 % of the respondents claimed that it was the customers who put some pressures on them to exchange information. Only 28.1 % of them claimed that they exchange information due to perceived benefits for themselves.

Table 3.25 shows that Buying, Purchase Order Processing, Sales Order Processing and Inventory and/or Transport are the main areas being discussed with key partners. Each of those is claimed by not less than 50 respondents (78.1 %). There are quite a higher number of respondents who were still reluctant to share their production planning, engineering/product design, manufacturing process/process planning and engineering/technical related matters.

Therefore, it appears that these companies tend to safeguard their sensitive information which may put their business in danger if it is exposed. Although it is currently accepted as a common practice, especially within manufacturing organisation, this may become a major barrier for EE.

The information discussed with key partners	**Number of respondents**	
	Yes	No
Buying	50 (78.1 %)	14 (21.8 %)
Purchase order processing	52 (81.2 %)	12 (18.7 %)
Production planning	12 (18.7 %)	52 (81.2 %)
Manufacturing process/process planning	17 (26.5 %)	47 (73.4 %)
Engineering/product design	30 (46.8 %)	34 (53.1 %)
Inventory and/or transport	50 (78.1 %)	14 (21.8 %)
Sales Order Processing	50 (78.1 %)	14 (21.8 %)
Engineering/technical related matters	14 (21.8 %)	50 (78.1 %)

Table 3.25: The items discussed with key partners

Table 3.26 shows shared marketing strategy has been claimed by 53 respondents (82.8 %) as being a resource to link with key partners, i.e. suppliers/sub-contractors while 41 respondents (64.1 %) claimed that product development as their resource to link with key partners. It appears that these companies traditionally tend to collaborate at the "end-line" of their production processes rather than from the beginning of the process.

Resources to link with key partners	Number of respondents	Percentage
Technology transfer/development	34	53.1 %
Product Development	41	64.1 %
Capacity rationalisation	19	29.7 %
Shared marketing strategy	53	82.8 %
Computer Integrated Manufacturing	37	57.8 %

Table 3.26: Resources to link with key partners

Agility and World Class Manufacture (WCM) are the two terminologies used within modern manufacturing systems. Table 3.27 illustrates that a large proportion of respondents (more than 80 %) claimed that they have strategy and systems provided for these two. Interestingly, Lean Manufacture is only claimed by 28 respondents (43.8 %).

Manufacturing Agility may be achieved by developing appropriate manufacturing strategy. Due to product complexity and limited manufacturing resources (capability and capacity), most manufacturing enterprises depend, to a large extent, on their key partners to produce their end products. These companies may have gone through a "different route" to achieve their agility.

The Company's strategy & systems	Number of respondents	Percentage
Agility	55	85.9 %
Lean Manufacture	28	43.8 %
World Class Manufacture	54	84.3 %

Table 3.27: The Company strategy and systems

71.9 % of respondents claimed that they have been supported very well by their respective supply-chain to achieve agility (table 3.28). None of them has claimed that their supply-chain has let them down. This may suggest that most of these companies have built-up a strong relationship with their key partners. However, this relationship may only be limited to 3 "traditional" objectives towards supply-chain, that is reduced costs and lead times with possibility of improved quality. When it comes to enhanced product flexibility and reliability it is only considered by 6 respondents (table 3.29).

The level of your S-C support for agility	Number of respondents	Percentage
Very Well	46	71.9 %
Satisfactory	12	18.7 %
Average	6	9.4 %
Poorly	0	0 %

Table 3.28: The support of agility

The objectives towards supply chain	Number of respondents	Percentage
Reduced costs	54	84.3 %
Reduced lead times	41	64.1 %
Improved quality	22	34.4 %
Enhanced reliability & flexibility	6	9.4 %

Table 3.29: The objectives toward supply-chain

3.3. The Interviews

The interview was intended to gain broader input from respondents, with respect to the "key issues" of EE, to get their opinions and to discuss their experience. The interview was semi-structured in the way it was designed and presented. It gathers respondents' views on 5 key issues with regard to EE, i.e. Vision, Process, Technology, Culture and Planning. The general format of the interview is provided in appendix 2.1.

Within the questionnaire, respondents were asked if they would be prepared to undertake a semi-structured interview. Forty respondents gave a positive response and subsequently twenty-nine respondents from twenty-six companies were interviewed (due to practical problems of timing and availability).

Hence, the interviews were not targeted at specific industry sectors and could therefore, be regarded as a relatively random sample. Formal statistical analysis was considered inappropriate, given the objective of the interviews and the relatively small size of the sample. However, the use of a structured approach to analysis of the interviews was considered necessary. The following is the discussion of such an analysis.

Cross-case analysis

Underdown (1997), using a "cross-case analysis matrix" to summarise the major issues from his interviews, argued that this analysis was initiated to discover patterns among respondents. A cross-case analysis matrix was later used as part of the induction phase of the Iterative Triangulation method introduced by Lewis (1998). Cross-case analysis is a method of discovering trends about key issues and views from respondents and was subsequently adopted to support the analysis of the interview responses.

In order to facilitate this analysis, a matrix of issues and views versus companies who participated in the interviews was developed. The rows of the matrix represent the key issues and views derived from the interviews, the columns are the companies who took part in the interviews. Cells holding a "1" indicate that the company shared

or agreed or implemented those views. A grey block in the cell indicates that the company did not share or implemented the given views. Finally, each view expressed by each respondent was added to total on the right column. Twenty-five key views were addressed during the interview to get response from the participant, which were then analysed. The resulting matrix is provided in appendix 2.3, along with a selection of transcripts, which is presented in appendix 2.2.

The major issues and views derived from the interviews were summarised as follows:

- Extended Enterprise can arise only as the result of clear "vision" and planning at corporate level. It is essentially driven from the "top" and requires planning at strategic level.

- Agility was seen as an important element in competitiveness for most companies. The concept of EE was attractive to companies because of its potential to integrate more fully activity and communication between enterprise partners and so provide enhanced agility.

- The high cost associated with product and process development for high technology products, were seen as a major motivation for a move towards EE, for SMEs in particular. Companies were attracted by the possibility of sharing technology and product and process development costs, seeing this as another key area of competitiveness, opening new markets and also as a driver of agility.

- Companies recognised the concept of core competence and could see how it related to their own companies. While they were aware of the potential benefits of sub-contracting "secondary" activity most had not given consideration to relinquishing (sub-contracting) what they regarded as core activity. The issues of reliability, trust and control were raised. Concern was expressed that even in a situation where there was strategic will between

potential partners, there would be difficulty in identifying which core activities might be relinquished to a partner and how the process would be managed.

- While companies saw the potential benefits of EE most had reservations with respect to their ability to implement it. Major concerns were with respect to: trust, loss of control, difficulty of communication, lack of experience and the existing "culture" of their company and staff. Companies and their staff were used to an environment where technology and information were guarded and most competitive development in terms of products and process technology was carried out in the company.

- Most of the companies thought that at least some progress towards EE should be part of their strategic plan but were unsure how to progress.

- The development of a reference model for EE, together with the development of potential approaches for organisation and management was welcomed and was seen as having the potential to support more timely and effective adoption of EE.

3.4. Case Companies

Three case companies were used to provide more detailed and focused information and to provide a practical basis for development of the reference model. One of the case companies formed the primary basis for exemplar application of the proposed "organisational structure for EE" discussed in Chapter Six.

Given the need for a relatively long-term relationship with the case companies and the requirement for detailed and in some cases "sensitive" information, the author was fortunate to find three companies, which satisfied the research requirements and were enthusiastic in their support for the project. The requirement was for an SME and a large enterprise, to provide information and scope for practical application at these two extremes. The two case companies selected, were from the discrete

manufacture product sector and it was felt that the inclusion of a third, process based, company would be appropriate. A large company involved in pulp and paper processing was chosen.

The SME (Case Company A) was most enthusiastic and supportive of the work and ultimately formed the primary case for the exemplar. This is appropriate given the significant potential of EE envisaged for SMEs and the interest expressed by them in the questionnaire. Further discussion relating to the case companies is as follows:

CASE COMPANY A:

Company A is one of Europe's leading plastics engineering and injection moulding specialists, having in the region of 100 employees. Their turn over is in the region of £10.0 m. Based in the United Kingdom and serving worldwide markets, this Company is "customer-driven" with a clear vision of the values upon which its success is built and its future depends. Quality and innovation are identified as major criteria for success.

This Company specialises in the design and manufacture of highly technical and carefully engineered injection moulding products. It is recognised as one of Europe's leading precision plastic engineers and injection moulders. It understands and supplies the special needs of the information technology and electronics industry sectors and has an international reputation for quality and dependability.

More than 70% of its output is exported from the UK to clients who include major multinational IT and electronics companies. The Company received the 1994 Queen's Award for export achievement. The commitment to quality and excellence in every aspect of the business is demonstrated by its attainment of ISO 9002.

The London Business School in co-operation with IBM identified this Company as a "World Class" manufacturer. Such indicators of excellence result from its investment in people and in design and production technology. Training and development

programmes ensure that the capability of its skilled engineering and support staff is constantly improved.

Primary Processes

The Company's primary processes are associated with precision injection moulding and include the design and manufacture of complex tooling. All manufacturing and verification operations performed within the Company, which have an effect on the adequacy of the finished product, are planned and defined as Process Planning Layouts (PPL). The PPL defines the order in which operations are performed; it also defines relevant manufacturing process specifications and relevant inspection and verification activities. A PPL is prepared by the Technical department, and is reviewed by the Quality and Production department heads prior to approval by a Director. Special processes requiring verification prior to the commencement of production are detailed in the relevant PPL and written procedures and work instructions. Once the manufacturing process has been formalised a Failure Mode Effects Analysis (FMEA) process is undertaken before manufacturing begins. The aim is to anticipate potential problems and prevent defects before they occur. The FMEA may result in a modification to the manufacturing process, leading to the reissue of the PPL. Upon completion of the PPL & FMEA, manufacturing may actually begin.

The IT and electronics industries make exceptional demands for precision, quality and durability on often extremely small and complex components. It is to address these requirements that the Company divides its capability into two primary areas:

- **Injection mould tooling**: by using state-of-the-art computer aided design and manufacturing technologies they design and manufacture modular single and multi-impression tools to suit most engineering type plastics. The Company provides a complete service, from tooling concept through detailed design and assembly to development and production trials. All tooling is subjected to exhaustive testing, under production conditions, prior to delivery.

- **Production Moulding**: It also specialises in the precision injection moulding of electrical and electronics connectors and other "critical spec" components. The automated injection moulding machines produce millions of precision plastic components each year for a wide range of customers and applications. It recently completed a single contract of 95 million components, which were delivered to stringent just-in-time schedules and with zero customer rejects. The growth in demand for post moulding operations such as printing, assembly and ultrasonic welding is also met through constant investment in new production technology.

Specialist support is provided to the two business areas by a spares and maintenance function and an engineering contract services function:

- **Spares and Maintenance**: this is to support both its tooling design and manufacture and its production moulding capabilities to provide scheduled and emergency servicing and full interchangeable spares back-up service for injection mould and progression tools. This high quality service guarantees minimum tooling downtime and maximum operating efficiency.

- **Engineering contract services**: employing "state of the art" CNC machines, this Company offers sub-contract spark and wire erosion services to other members of the tool making industry.

The Company is currently working to reduce product lead-time by reducing product development time. This is seen as a major order winning criterion in current and future markets.

Company's Organisation

The Company's organisation structure is not what may be expected from a typical SME. It is divided into 5 functional divisions, they are:

- Engineering (ENG)
- Plant Operations (PO)

- Production Planning & Inventory Control (PPC)
- Distributions & Customers Support Systems (DCS)
- Business Operation (BO)

Engineering, Plant Operations and Business Operation have been the focus of observation for this thesis.

The Company's current situation

Given the fact that most of their employees' skill and expertise is gained and built from years of hands-on experience that often involves trial and error procedure, it may be fair to suggest that much of their basis of competitive advantage lies in the skill of their employees. The Company is currently facing pressure from their competitors with respect to lead-time. A task group was formed to identify aspects that had direct and indirect influence on product lead-time. As a result the Company recently ran a trial of Vantage®, Epicor's e-Manufacturing package, in an effort to streamline the processes. The objective was to give everyone in the organisation quick access to critical business information through sophisticated reporting tools and online tracking of orders, jobs, parts, quotes, POs, customers, and accounts. After several months of trial the Company management decided that the software was far too complicated for them to operate and would need full time support. The programme was abandoned and the Company returned to the use of their original Access system.

From this several things may be observed:

Technology

Complex and complicated technology, which is not directly related to their core competence, cannot easily be introduced and implemented by the Company. This is due to their limitation on resources, i.e., human, hardware, and capital resources. This may prevent the Company from implementing advanced technology in areas other than that of its core competencies. In turn this will inhibit them in the battle with their competitors. Realising that the Company does not actually have the resources to concentrate fully on to this program the management then attempted to hire the service of an IT consultant to help them to solve the problem.

Organisation

Organisational structure of Company A is not that of typical SMEs. It has several functional divisions, each of them led by a director who reports to the CEO (Managing Director) of the Company.

People

People are vital assets for this Company. Most of the Company's key personnel started their career with this Company and are still with it. It may also be noted that after being in business for three decades the Company has lost only four employees. This is very rare to see within Western enterprises. Hence, it may be seen that the Company has formed a strong and steady bonding with its employees. Each employee has a strong sense of belonging to the Company. Each of them has a unique expertise relating to plastic and precision injection moulding technology. However this could potentially inhibit them from working in a "flexible" manner with staff outside the Company.

Culture

An important aspect is company employees' loyalty, as mentioned earlier. Another is management commitment to continuing training and education for all of their staff. Hence the Company is always in a good position to absorb and implement the latest core technology for the Company. The top management view of inter enterprise relationships is very encouraging.

Company's progressions towards EE

A large customer has relocated one of its production lines to the Company site. This was done to gain close access to the Company expertise, share resources and utilise its spare capacity. This is regarded by the Company as its first venture into what they understand as EE. In fact the situation illustrates some important characteristics of EE. The Company succeeded in solving the difficult task of assembling several colour cartridges, by moulding printer parts for one of its major customer. This particular customer is one of the world's major computer equipment manufacturing companies. To undertake this challenge Company A assigned two injection-moulding specialists to join its customer's design team. Soon after their assignment,

these two injection-moulding specialists came up with a solution to deal with the problem. It resulted in Company A being given a contract by its customer for manufacturing of colour printer cartridges. Company A has not only got the contract, but also its customer has eventually shifted some of its production lines to Company A.

It may be worth noting that the companies have displayed some of the characteristics for EE, i.e. sharing technology, joint new product development, sharing resources, and sharing profits as well as risks. It may also be noted that by letting each other's employees be involved with internal activities and processes, these companies may have exposed sensitive and critical information. This is where trust, as one of characteristics of EE, is required within an EE framework.

Another example was when this Company successfully designed and manufactured a mobile phone connection device for a large European electronic and communication manufacturing company. This involves an intricate process of laying down gold-plated connectors into a communication data cable. After several trial and error processes the Company successfully designed and subsequently manufactured this connector.

This resulted in the Company being given a contract for this type of connector, together with a relatively expensive laser machine to join the connectors, at the expense of its customer. Hence it may be observed that sharing or joint investment, one of characteristics of EE, has been implemented.

There are several key characteristics of EE, which may be noted:

Rationalising and Sharing of Resources

The customer has given up ownership of some of the capacity and resource associated with its product and has accepted that what was previously considered a core competence would now be owned by its supplier.

Sharing of Staff

During the project there has been exchange of staff between the two companies. This may also have resulted in technology transfer between the two companies.

Trust and Sharing Risks

Both companies are committing themselves to a new management. The customer risks of losing control of a core process, but has put its trust in Company A. Company A has taken on a special relationship with the customer. This relationship may lead to a conflict with respect to other customers.

Sharing of Information and Expertise

The customer provided Company A with information relating to the final manufacture of their product. Prior to this the exchange of information had related only to the specification of tooling and special equipment. Company A and its customer now share detailed information with respect to current and future capacity planning and scheduling data. Company A staff are also involved in the product development process of the customer.

Company A has identified the potential benefits of EE and has adopted an approach to collaboration, which aims to promote it. They are:

- Involvement with appropriate suppliers and customers where possible at the design stage,
- Sharing of staff and expertise,
- Rationalisation of expertise, equipment and capacity with companies, which have the potential for longer-term collaboration.

CASE COMPANY B:

This Company is one of the indigenous aerospace companies in Asia with core competence in aircraft design, development and manufacturing of military and civilian regional commuter aircraft

The Company is entering a global transformation and is preparing to face the challenges of fierce competition within the aircraft manufacturing industry. The

Company is to implement a long-term strategy while adapting itself to the current situation. The Company has recently been restructured, in line with government regulation and the markets. Now, the Company manufactures a wide range of industrial products and services including aircraft and non-aircraft products.

The new structure comprises nine strategic business units, six profit centres, four resources centres, six subsidiaries and one corporate function. This allows better responsiveness to suppliers, sub-contractors, partners, and customers, and also more openness to business co-operation with other companies. Currently, the Company also offers services as follows:

- Engineering work packages: design, development, testing, etc.
- Manufacturing subcontracts
- Aircraft Maintenance Repair and Overhaul (MRO)
- Engine Maintenance Repair and Overhaul (MRO)
- Aircraft Industrial Tooling and Equipment Manufacturing

The Company's current situation

Established in 1976, the Company has gained state-of-the-art technology through a systematic approach to become an aircraft integrator, capable of meeting international standards. The current number of employees has been reduced to 10,198 from approximately 15,000 just a few years ago, including 2500 engineers and 5000 technicians and operators.

The Company covers an area of 79.3 hectares of building. The manufacturing area is equipped with 88 Computer Numerical Controlled (CNC) machines, 47 Numerical Controlled (NC) machines and 445 conventional machines. The computing facilities have CATIA workstations, mainframes, super computer, state-off-the-art aerodynamics software, engineering, and business software.

This Company was noted for trying to manufacture most of its components in house or at least in one of its wholly owned subsidiaries. However, since the nature of the business involves million of parts it still needed a substantial amount of parts from suppliers, sub contractors and partners including one major partner in Europe.

This has caused the Company to struggle in maintaining its manufacturing and business infrastructures. This is particularly true with respect to engineering and manufacturing data exchange and data management. Incompatibility of software and hardware has created problems in engineering design, drawing, and Engineering Change Order (ECO). The result is multiple product data, and products that are not in conformance to the latest version.

In order to handle this complexity, the Company appointed a partner company, specialising in information technology, to have responsibility for establishing a more coherent and integrated approach to engineering data management.

Company's progressions towards EE

The Company saw their current situation as a barrier to the formation of closer links with suppliers and partners and hence their progression towards EE operation.

- **CAD Data Exchange**

  Company B has pursued a policy of electronic exchange of data between its customers, suppliers, sub-contractors and partners. Much of this has been based upon standard CAD data exchange systems, e.g. IGES. However, IGES does not provide an ideal solution, as CAD systems often do not support the same geometric/graphic entities.

  Given the Company's wish to move further towards EE there has been an initiative to standardise their CAD system in the operations of their key partners. This has financial implications for the partners and has involved the provision of support on the part of Company B. These initiatives have reduced the incidence of non-conforming parts by 85%.

- **Common Database**

  A common Product Data Management (PDM) system has been set up and is accessible to approved suppliers, sub-contractors, partners, and customers. The system combines an information database with a range of engineering and information management systems:

- Drawing management and Engineering change control, i.e. configuration management
- Project Management
- Process Planning

While some difficulties arose with respect to establishing the communication standards for the database they were eventually agreed between Company B and its major partners. These may be regarded as a potential core for EE.

Suppliers, sub-contractors and customers who wish to enjoy the benefits of a closer relationship i.e. progression towards EE are encouraged to accommodate the communications standards, with the support of Company B and its partners.

The PDM was set up and maintained by a partner Company, which specialises in this area. This has resulted in a restructuring of Company B in that their Engineering and Computing Systems Division was dissolved i.e. they relinquished ownership of a competence to allow for more effective operation by a partner who regards it as a core competence.

Company B and its partners may be seen to have made progress with respect to goal sharing, rationalisation and deployment of core competence and sharing of resources. Company B has entrusted a great deal of valuable information to the Company, which maintains the database. Hence, this represents a significant degree of trust and a sharing of risk.

CASE COMPANY C:

Company C is the largest pulp and Paper Company in South East Asia. It produces 850,000 tonnes of pulp annually at full capacity. This Company operates the largest single-line mill in Asia.

Located on Sumatra Island of Indonesia, the plant is equipped with state-of-the-art technology designed to produce high quality paper-grade pulp, using modern manufacturing methods for both production and environmental systems. It must be emphasised that pulp production is tightly regulated from the environmental aspect and is under close scrutiny from the national environmental agencies.

Many of the world's most sophisticated papermakers recognise the value this Company adds to their paper production and to the quality of their products.

Their pulp is used in a wide variety of paper products including sanitary papers, coated and uncoated printing and writing papers, paperboards, and special papers.

The Company's Current Situation

Company C is the largest Asian market pulp producer. It is currently supplying 2 world-class UWF paper machines. This Company is listed on the New York Stock Exchange. This Company is also the forest product arm of an Indonesian conglomerate, which has total assets of approximately US$4.3 billion.

In operation since early 1995, the pulp produced is 100% Elemental Chlorine Free (ECF) and the Company mill meets all local, regional and national Indonesian environmental standards.

In addition, the Company also meets internationally recognised environmental standards for both air and effluent such as the United States Environment Protection Agency (EPA) cluster rules. This Company's process technology comes from the world's leading producers of pulp and paper process equipment.

The pulp and paper making process

Raw material for pulp and paper making process contains chipping wood, cooking liquid, steam and whitening chemical agent. The composition of wood to be processed is as follows:

- Cellulose 40 – 45 %
- Hemi-cellulose 20 – 25 %
- Lignin 25 – 30 %
- Extractives the rest

The processes involved and their relationship is illustrated in figure 3.1 and figure 3.2.

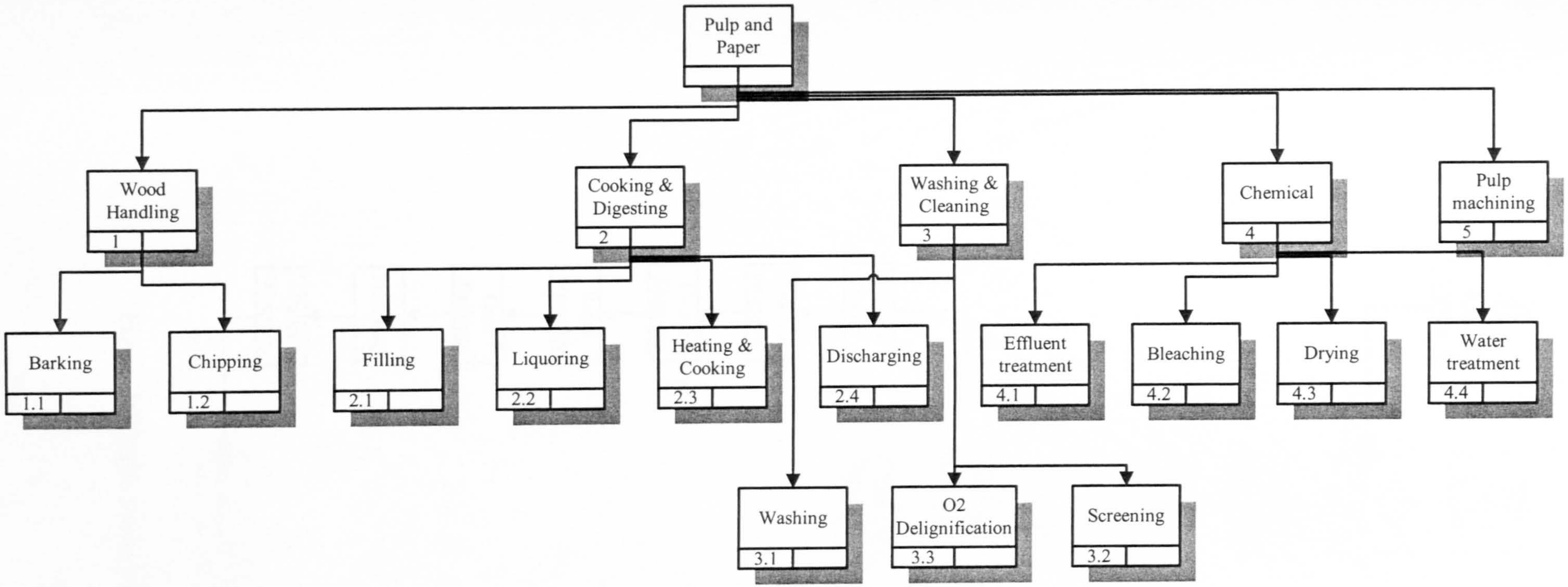

Figure 3.1: Pulp and paper process

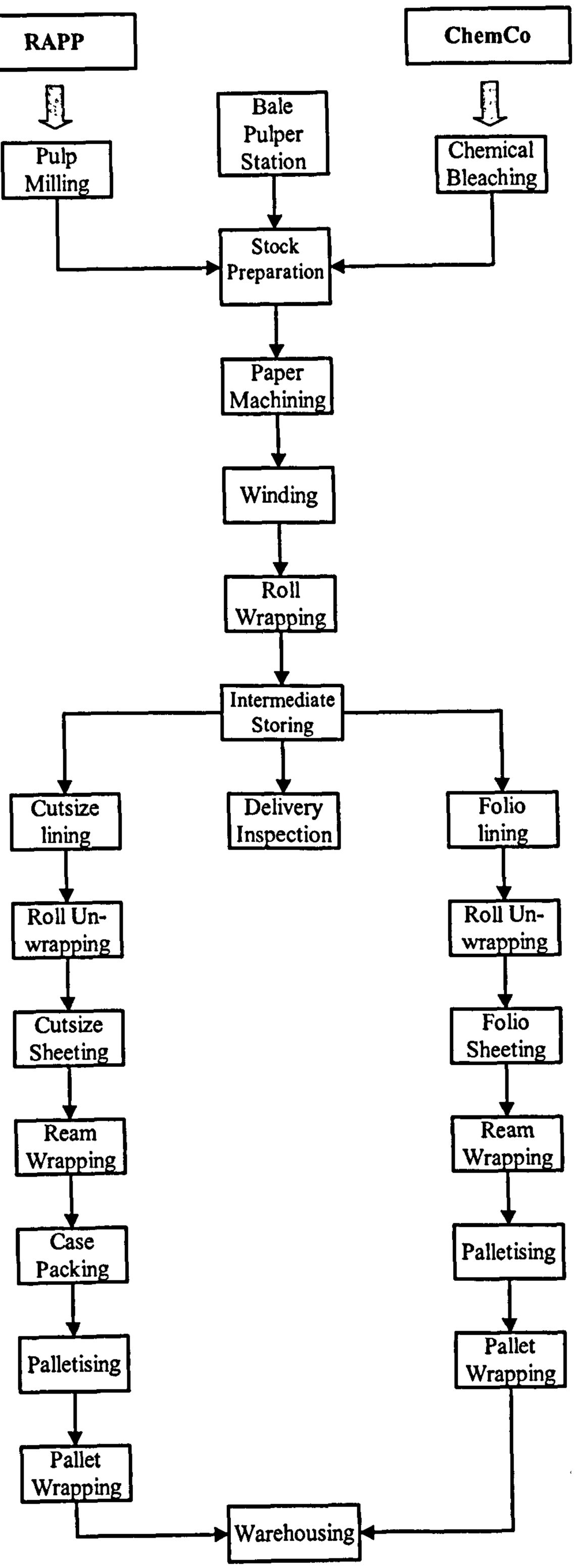

Figure 3.2: Paper production flowchart

Company progression towards EE

Company C has had traditional relationships with RPE, for its supplier of energy and power generator and ChemCo, a supplier of chemical products. Both of these companies are owned by the local government but with some private shareholders.

Over recent years the relationship of Company C with RPE has changed. Initially Company C provided its own generating capacity but now takes on an increasing proportion of its requirement from RPE. This may be regarded as rationalisation of resources within EE. RPE now has responsibility for what in their view is a core competence.

Environmental issues such as pollution and the need for re-planting of trees is leading Company C into the formation of closer strategic alliances with various companies, some of which are controlled by local government.

There is potential to benefit from local and national investment programmes and this is more likely to be achieved if the relationships between Company C and its partners move towards EE.

3.5. Key Indicators from Case Companies

The key indicators and characteristics of EE derived from the Case Companies are as follows:

- **Technology transfer**

  To succeed in today's global competition every enterprise needs to keep up with the development and deployment of technology. However, the development and deployment of advanced technology usually requires a big capital investment. It may be feasible for companies participating in EE to share such investment, i.e. by technology transfer. Technology transfer may involve joint research and development, education and training, or on the job training. For SMEs, typically with very limited capital and human resources, it will be a significant help. This is the circumstance found in Case Company A.

- **Rationalisation and Distribution of capacity**

  Capacity may be transferred between EE partners both in response to short-term considerations (operational) or longer-term considerations (strategic). Examples of this were identified in Case Company A and Case Company C.

- **Rationalisation and Sharing of Core Competencies**

  Core competence has been seen as a central issue in EE. It is essential that every member of EE in order to win global competition be able to rationalise its core competencies with others. This, in practice, may involve relinquishing a particular core competence to another member of EE. Examples were found in Case Company A and Case Company B.

- **Shared resources**

  It is inevitable that the rationalisation and sharing of core competencies will often lead to rationalisation and sharing of resources. Examples of this were found in Case Company A and Case Company C.

- **Shared product development tasks**

  Product development may be seen as a strategic exercise for a Company to win market competition. This task usually involves a multi-disciplinary team. In the situation where expertise outside Company's internal core competencies is needed then it is often necessary to seek this from external entities, such as suppliers, sub-contractors, partners or even customers. EE attempts to structure partners such that the sharing of product development activity is well defined and is effective; the key players being within EE. This situation was found in Case Company A and B.

- **Shared marketing strategies**

  Marketing strategies are the means by which marketing objectives are to be achieved. They are generally concerned with four major elements of the marketing: Products, Price, Place and Promotion.

  However, for hi-tech industries such as aircraft manufacturers there will be the fifth element, which is standards and regulations. Due to Civil Aviation Safety Regulations introduced by the Federal Civil Aviation Administration (FAA), which is adopted by most countries, there is a set of standards and regulations, which must be conformed to by any aircraft manufacturer.

  Case Company B (section 3.4) needs to share its marketing strategies with one of its major partners in Europe in order to be able to sell its products (aircrafts and its associated components) to other countries that have adopted such regulations. Therefore, Company B and its partner have to share their market accordingly i.e. Company B will market its products within Asian and South American countries, whereas its partner markets and sells its products to North American and European markets.

  This strategy may be seen as one of indicators towards EE since it appears to have involved some kind of goal rationalisation/ integration.

- **Shared aspirations (visions)**

  It is understood that every organisation will have its own vision and mission statement to follow. However, it may also be possible for organisations to share aspirations with their external entities such as suppliers, sub-contractors, partners or customers.

  Case Company B has experienced such a case during the design and development of its first aircraft with a major European aircraft

manufacturer. The two companies have a vision on developing a 50 seater's turboprop engine commuter aircraft.

This strategic vision is a result of a joint feasibility study and market research. They believe that there is a potential market for short-distance regional type of aircraft instead of wide-body long haul jumbo-jet aircraft like BOEING 747 or Airbus 300 series. These are suitable for the geographical situation of Indonesia, which comprises of more than 13,700 islands stretching along the equator.

- **Shared strategic planning**

  The sharing of strategic planning usually comes after a long-term relationship between organisations. This can be seen with Case Companies A and B. Company A has shared its strategic planning with one of its main customers (the electronic/communication goods manufacturers) after serving it for not less than 10 years.

  The shifting of the customer's tool making processes has resulted in a significant profit increase for Company A and a better development and lead–time for its customer. Company B shares its strategic planning with its main partner in Europe by dividing their part manufacturing contribution.

- **Shared risks**

  The "latest" approach towards closer supplier-customer relationship is the "Advanced Supplier Partnership" concept introduced by Blair Williams from AT&T (section 2.4). It has been stated that this concept is based on effective materials management coupled with price adjustment provision systems agreed in advance between suppliers and customer.

In this case it may be observed that both suppliers and customers are willing to take some degree of risk as well as anticipated profits. Such arrangements are seen as a key indicator of EE. This practice may be found on all three case companies, but company B may be seen as having a higher degree of sharing risks.

- **Joint investment**

A common problem with SMEs is limited capital resources. This may, to some extent, restrict them in developing their resources and capacity, and subsequently their markets.

Company A experienced such a situation when its resources reached its "yield" point. This limitation caused the Company to halt their expansion plan. Therefore senior management, i.e. CEO of the Company, took some important and crucial steps towards joint investment with partners based in Singapore.

The joint investment strategy with a multi national company in Singapore has allowed this Company to expand its market to China. By setting-up a design office in Singapore and mould making facilities in China brings two big advantages to the Company.

Firstly, the Design Office in Singapore provides an easy access to state of the art CAD facilities for its prospective customers. In addition to that, Singapore's geographical situation has brought the Company competitive advantage over its competitors.

Secondly, mould making and fabrication facilities in China have also some advantages. Cheaper costs in term of land and building prices as well as manpower are certainly added advantages for their businesses.

However, it should also be noticed that by joint investments, it also means that risks are also shared.

- **Shared information (both markets and/or technologies)**

  This is a complex issue in that it has a strategic element, i.e. willingness to share potentially valuable and sensitive information (element of trust and risk) on operational element, i.e. the ability of personnel from the partners to communicate. This has a technical dimension (standards, terminology, hardware and software) and a cultural/behavioural dimension.

  The Internet and expanding satellite communications may provide an effective backbone for development into EE. An example of effective communication was provided in case Company A and Case Company B.

- **Joint R&D tasks**

  R&D may be seen as the main source of technological innovation. Manufacturing industries are usually depending on it to compete. Case Company B initially developed its first aircraft through joint product development and R&D with a larger European Aircraft Manufacturer.

CHAPTER FOUR

DEVELOPMENT OF THE REFERENCE MODEL

4.1. Introduction

There are generally three types of model that may be considered: partial, reference, and particular. According to Vernadat (1996) a partial model leaves out key details that are populated at lower levels specific to the aspect being modelled. While a reference model is a partial model that provides a basis for developing a more detailed or particular model. It often represents a specific instance of the system.

This research aims to provide a reference model that contains some degree of genericity for Extended Enterprise (EE). This reference model is a conceptual depiction of EE and includes a philosophical construction of EE together with a proposed structure for strategic planning and organisational structure.

The philosophical construction includes identification of the needs and resources for EE.

4.2. The Process of Building-up EE Reference Model

Enterprise reference models are commonly used to provide a reference for different enterprises within the same industrial sector. Significant reduction in the time to create particular operating and control systems can be achieved with a reference model as a starting point. With many enterprises using the same reference model to develop particular models, the quality, consistency, and interchangeability of enterprise models may be enhanced. This facilitates both communications between enterprises and interconnectivity of resultant enterprise models.

The reference model may be used to understand the general architecture of the enterprise being modelled. It may provide users or viewers with a common understanding of the systems in general.

It builds-up initially from a literature review mostly from published research as well as author's own extensive experience within manufacturing industries.

The review of literature is supported by information and insights gained from the questionnaire and case companies.

Much of information sought with respect to strategic issue within the Case Companies was "sensitive" in its nature. Case Company A provides more detailed information in this area and was enthusiastic in supporting development of the model. The exemplars of the proposed strategic planning and organisation structure provided in Chapter Five and Chapter Six are based upon the operations of Company A. Figure 4.1 illustrates the structure of building-up process on EE reference model.

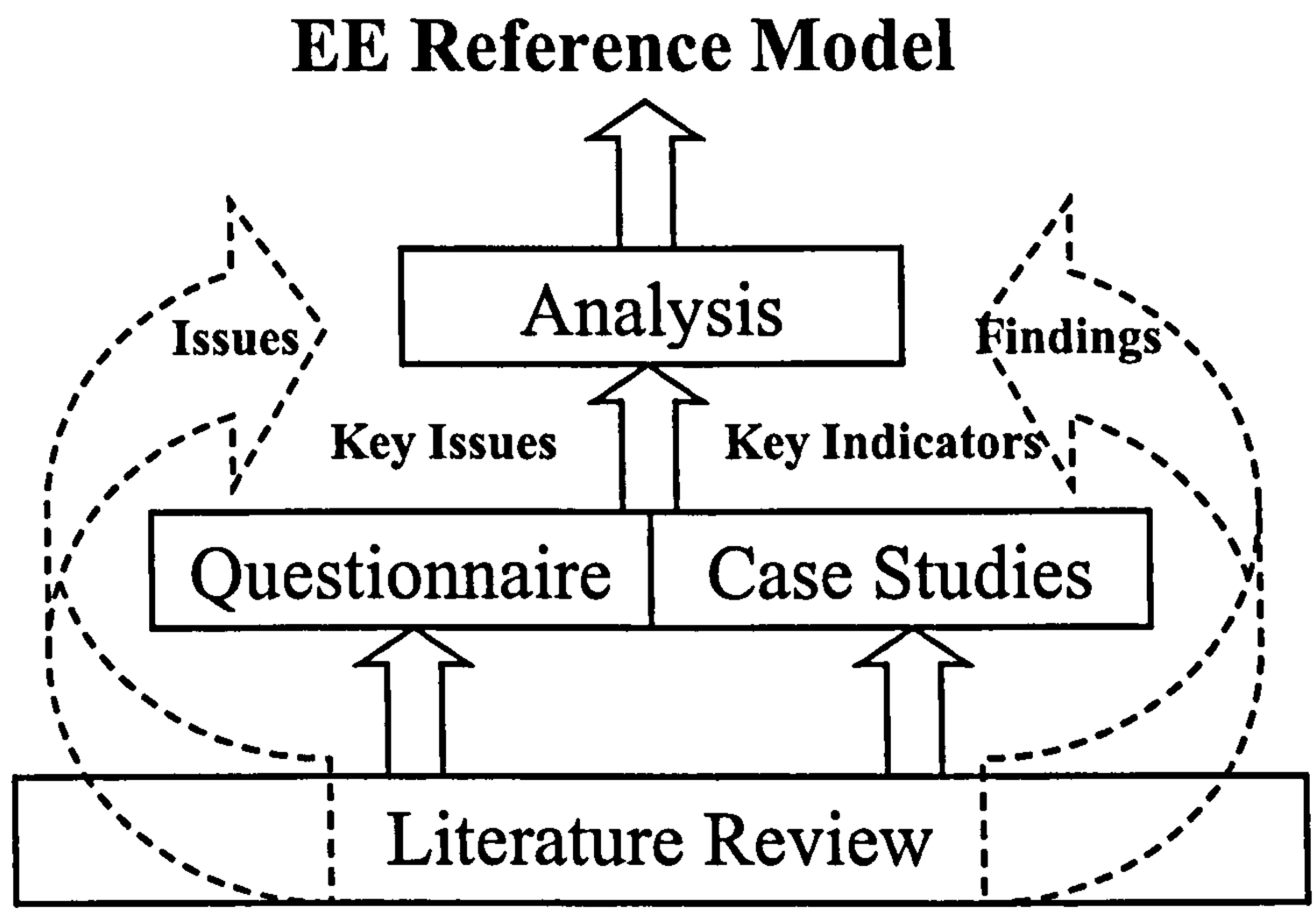

Figure 4.1: The Process of Building-up the EE Reference Model

Structure of the model

It is appropriate to consider the basic structure for the model under 3 main headings, i.e. needs, criteria and resources:

Needs

There is a requirement for EE to develop from a basic supply-chain relationship to a higher level of co-operation and collaboration, so as to achieve greater efficiency and agility and to compete in ever more competitive markets. These needs must be viewed from an inter-enterprise networking perspective that promotes and enables closer collaboration between an enterprise and its suppliers, sub-contractors, partners, and customers Yusuf (1996).

It may lead them to form strategic alliances or co-maker partnerships. Such partnerships require a means or mechanism that will enable each company's member to pursue its own goals and objectives, as well as the partnership's goals and objectives.

Criteria

First of all the criteria of EE must be established, as it determines the main characteristics of EE. As with the "needs" of EE these criteria are developed within the context of inter-enterprise networking. Secondly, it may be appropriate also to consider them from 3 main perspectives, i.e. type of organisation to be formed, status of each member and basis of collaboration.

Resources

These define the resources used in satisfying the needs and establishing the criteria. These resources represent key indicators and enablers of EE as well as potential barriers to its formation and development.

Senior management's main strategic role within EE is setting the purpose, promoting the change, defining generic procedures and setting up appropriate organisation

structure. As EE is initially a top-down approach, it depends a great deal on top management support and commitment. It is appropriate therefore to follow a logical top-down approach (starting with goal integration) to describe EE itself.

This thesis provides an Extended Enterprise Reference Model to explain and to give greater understanding of the process of building-up and constructing inter-enterprise networking across the value chain, beyond that of the Supply-Chain Management concept. However it may be noted that it is not a detailed structural/organisation model. It is intended as a means by which organisations can match the attributes/characteristics of their organisation and collaborators with that of "ideal" EE.

The model is designed to be used as the basis for the process of evaluation and strategy formulation described later in this chapter. As such, it will provide a framework to develop a common understanding towards the needs, the criteria and the resources of EE. A more detailed organisational structural model will be proposed for an essential element of EE i.e. identification, rationalisation and deployment of core competence across EE, in Chapter Six.

4.3. Extended Enterprise Definitions and Characteristics

In order to survive in a volatile competitive market and to achieve success in today's rapidly changing world, manufacturing organisations need to adopt new ideas and concepts. More over, the business world is currently moving towards globalisation; i.e. manufacturing takes place in a global economy, where local markets are subject to global standards and competition. At the same time there are demands on manufacturers to produce customised and more environmentally benign products. This demands the presence of agile manufacturing systems.

Manufacturing agility must be achieved by developing appropriate manufacturing strategy. Due to product complexity and limited manufacturing resources (capability and capacity), most manufacturing enterprises depend, to a great extent, on their suppliers, sub contractors, and partners to produce their end products. This may

involve a large number of enterprises working very closely together. Hence they may attempt to form inter-enterprise networking.

While every enterprise has its own strategic goals and objectives, enterprises working within this "new" environment must embrace goal integration/goal rationalisation with their external entities, with the associated constraint on their strategic and operational planning. The nature of this relationship is that each of enterprise may offer its own core competence to be applied within EE. This competence may be seen in terms of specific skills, expertise, facilities, etc. From this it may be argued that goal integration and appropriate core competence (at EE level) are the "needs" of EE.

Extended Enterprise concept appears to be the latest manifestation of manufacturing organisations' concern to understand the real meaning and ultimate potential of collaboration or partnership. The idea of pulling companies to work closely together in order to adapt fully to market needs, reduce lead times, and streamline productions flows, has previously triggered other related concepts such as Supply Networks, Value Chain and Supply-Chain. Supply-Chain, a term initially and increasingly used by logistics professionals, represents the co-ordination and integration of the activities and transactions of a group of suppliers/contractors in the effective provision of products or services to end-users.

Muller (1990) suggests that many practitioners' view Supply-Chain Management (SCM) as very much similar to the theory of Integrated Logistics, the major difference seems to be that SCM is the preferred name for the actualisation of Integrated Logistics theory. However, the challenge of modern manufacturing organisations lies not only within the logistics issue.

There are other issues also that need to be addressed such as product quality and reliability, new product introduction and product development, capacity distribution, marketing strategy, investment policy etc. Consequently, there is a need to acquire another concept, beyond the SCM theory.

There has been work done by some researchers and practitioners to progress beyond the SCM theory and beyond the theory of Integrated Logistics. Many terms have been introduced to describe this new and topical area, i.e. Virtual Enterprise was presented by Davidow and Malone (1992); Parunak (1994); Doumeingts et al. (1995); and Goranson (1995); Seamless Enterprise was submitted by Harrington (1995); Extended Enterprise was introduced by Busby and Fan (1993); O'Neill and Sacket (1994); Browne et al. (1995); Caskey (1995).

Virtual Enterprise and Extended Enterprise appear to be the two most widely used terms. To date there are still many discussions regarding the two terms, some consider that they are the same but others believe that they are different.

Jagdev and Browne (1998) claim that the difference between Extended and Virtual Enterprise is only a question of semantics. However, they also argue that the degree of integration is closer and the scope at co-operation is wider for the Virtual Enterprises. Therefore, it follows that Extended Enterprise may be considered as a special case of the Virtual Enterprise.

Extended Enterprise, according to Browne, et al. (1996) and Gott (1996) may be regarded as a kind of enterprise which is represented by a number of organisations or parts of organisations, customers, suppliers and sub-contractors, engaged collaboratively in the design, development, production and delivery of a product to the end user.

It would also be fair to suggest that achievement of the state of Extended Enterprise is associated with the degree of integration across the partners, EE being achieved when integration is achieved at the highest (goal) level and is then deployed effectively downwards and across lower levels of the partnerships. Degree of enterprise integration has been discussed in Chapter One, where the CIM-OSA group, when introducing the concept of the CIM-OSA modeling tool (1996), classified enterprise integration into three types, i.e. physical systems integration, application integration and business integration.

Hardaker and Ahmed (1995) believe that only with a focus on the business needs, rather than on application or system needs, can the move be made from local optimisation to global optimisation.

Miller (1986) argued that there are 3 types of integration, technical integration, procedural integration, and goal integration. Goal integration, according to Browne, et al.(1996), is the highest level of integration as discussed in Chapter One. Consequently, it follows that Extended Enterprises should migrate to the highest level of integration that is goal integration or business integration.

This argument is supported by Mariotti (1996), stating that enterprise partnerships suggest a relationship between companies and people who share common goals, strive to achieve them together and do so in a spirit of co-operation, collaboration and fairness. It may therefore be perceived that goal sharing and integration are key indicators of successful implementation of Extended Enterprise concept. Detailed discussion of goal integration is presented in section 4.4.1.

Future manufacturing systems according to Browne et al (1995) are subject to significant pressures:

- Anticipation of global competition in local markets,
- Developing environmentally benign products and processes,
- Anticipating new forms of business organisation.

They carry on to say that there are five issues that should be stressed within the context of Extended Enterprise and inter-enterprise networking:

- Reduced product life cycles,
- Time-based competition,
- Total product life cycle,
- High quality people and innovative organisations,
- Manufacturing strategy development.

The evolution of an extended Supply-Chain to the status of EE may be seen as a move towards a virtual organisation structure, which will address these 5 major aspects.

4.3.1. Development of Reference Model

For the purpose of this thesis the concept of Extended Enterprise may be explained by modelling manufacturing enterprises within the global manufacturing universe illustrated in figure 4.2.

Within this global manufacturing universe, manufacturing enterprises are classified into four categories: micro, small, medium and large enterprises (Roberts, 1997) and this is represented by circles denoted with one small digit (x), one capital digit (X), two capital digits (XX) and three capital digits (XXX) respectively.

Each of the enterprises shown in figure 4.2 may be considered to be a "primary" enterprise i.e. one which exists to make profit from the sale of its associated goods and/or services and in doing so will make use of a chain of suppliers.

In some cases these enterprises may have "re-engineered" their operations, concentrating upon their "core competencies" and making use of an "extended supply-chain", or supply-chain network.

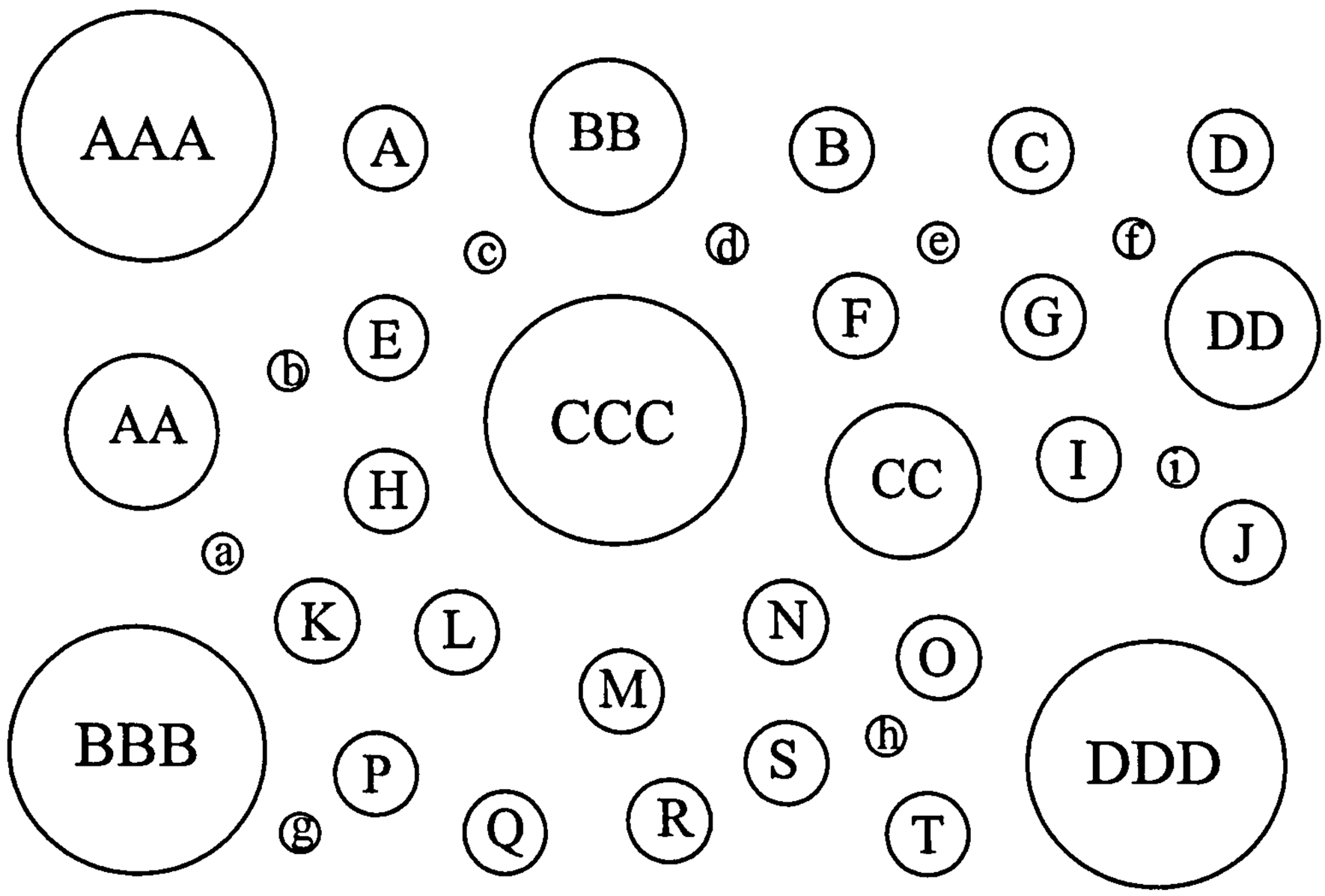

Figure 4.2: Global manufacturing universe

This leads to a complex mapping of suppliers-customers relationships between companies (enterprises) in the global manufacturing universe, as shown in figure 4.3.

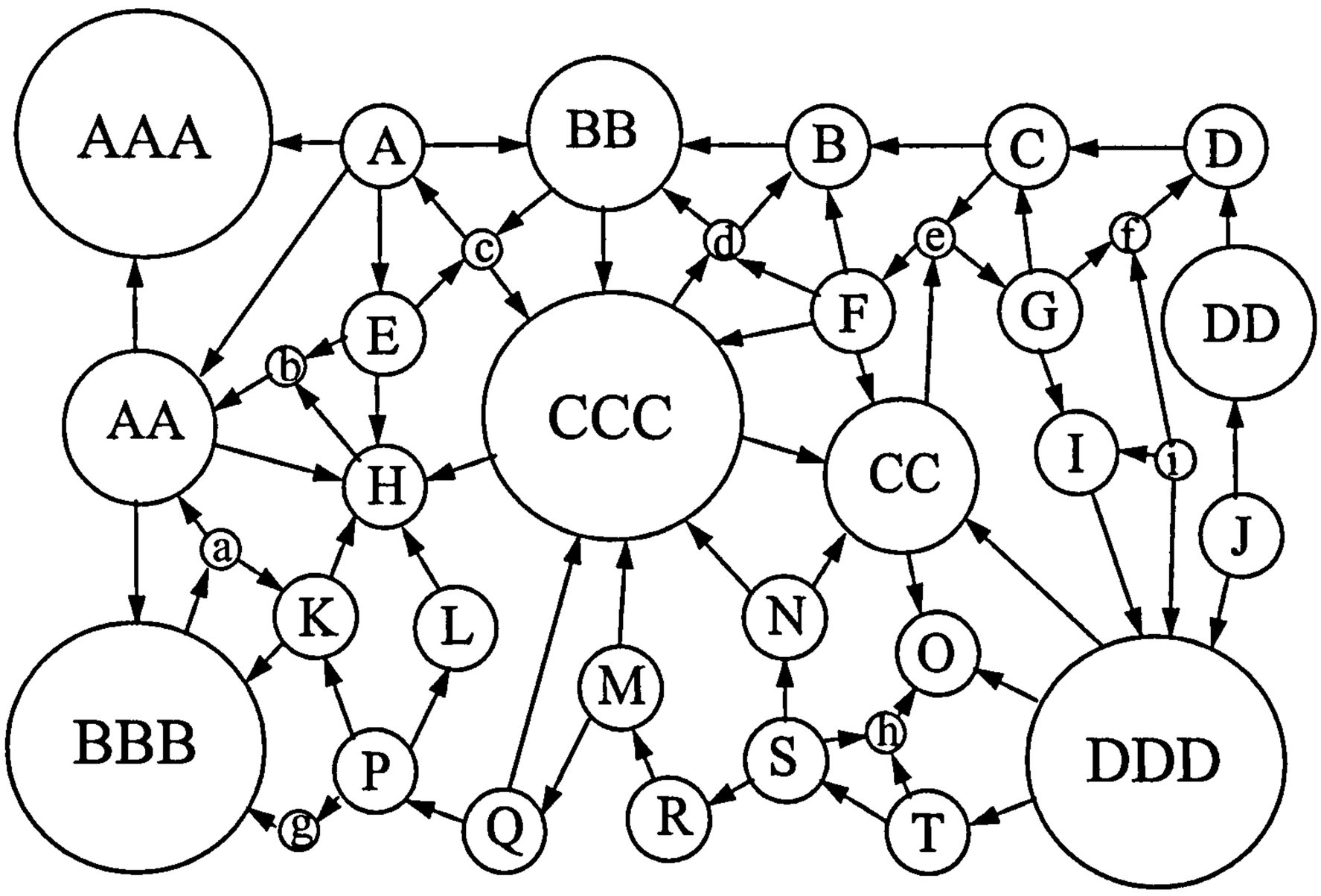

Figure 4.3: Global Supply-Chain network

For practical reasons it is not appropriate to consider the manufacturing universe as a whole as each of enterprises in the manufacturing universe will tend to consider itself at the hub of its sphere of activities (enterprise).

It appears appropriate to define a Supply-Chain in terms of a "primary" enterprise. Figure 4.4 and 4.5 illustrate supply-chains centred on a large enterprise and a small enterprise respectively.

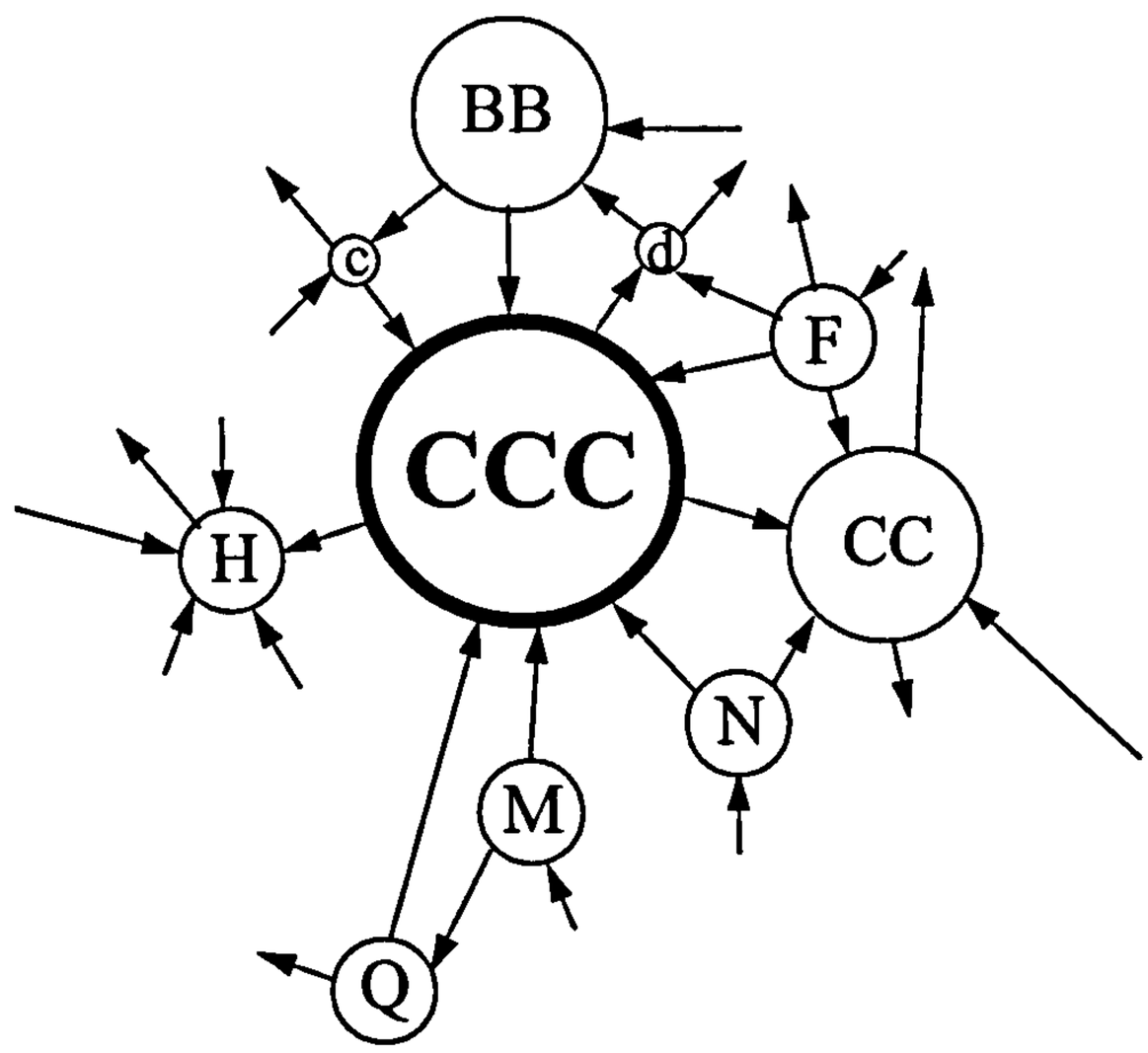

Figure 4.4: Supply-Chain with large company as the primary

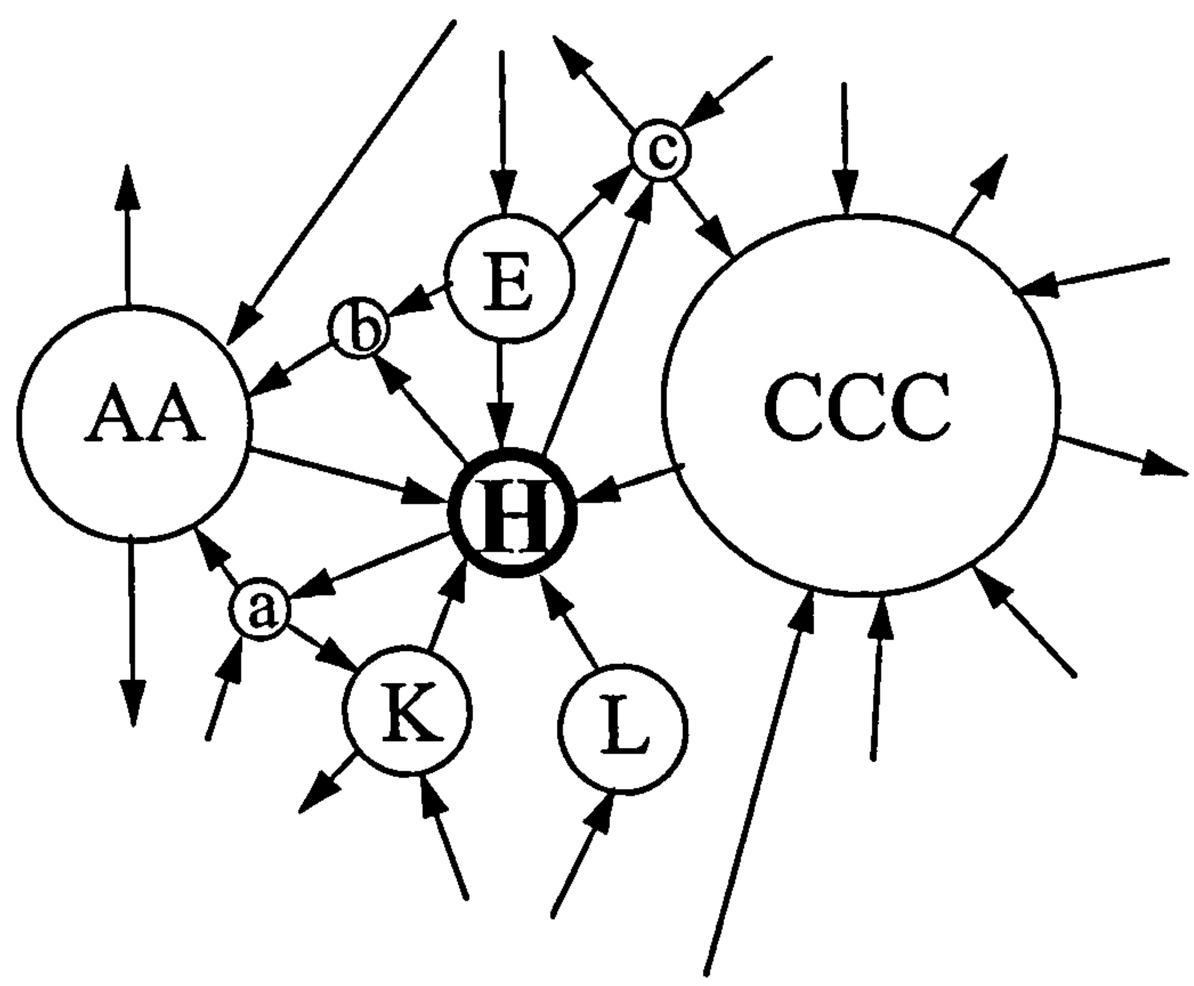

Figure 4.5: Supply-Chain with small company as the primary

Hence, the focus of an extended supply-chain may, in some circumstances, be the smallest individual enterprise in the chain. Given that all enterprises will consider themselves as "primary" in their role as customers/clients and secondary in their role of supply/support to their customers/clients; the potential links and relationships within the global manufacturing environment are extensive, complex and dynamic.

Given this situation, the definition of "Extended Enterprise", as provided by Childe (1998) is useful:

> *"A conceptual business unit or system that consists of a purchasing company and suppliers who collaborate closely in such a way as to maximise the returns to each partner".*

For the status of Extended Enterprise to be deserved, the members of an extended supply-chain must identify, rationalise and then integrate their respective goals and activities. This is a difficult task in a stable environment but is even more complex in the increasingly competitive and dynamic manufacturing environment.

Currently large primary companies will generally be dominant as they use their central influence and power to pursue their individual goals (Wortmann, 1998). This could be described as a "dominated supply-chain" rather than an Extended Enterprise.

4.3.2. Small to Medium Enterprise (SME) Networks

With the above in mind it may be argued that most SMEs are potentially part of an Extended Enterprise structure of other (and often larger) primary enterprises. It may be that SMEs can benefit from an increased understanding of the opportunities and threats associated with such environments and particularly as an ability to work effectively as part of a dominated supply-chain, as well as an Extended Enterprise, may provide the SME with a competitive advantage.

Integration among SMEs, as well as with other big players, appears to be one of the important aspects of an Extended Enterprise. Hence, it leads to "integrated supply-chain" rather than just a supply-chain network.

However, a more integrated approach to supply-chain management may not be beneficial to all SMEs. A closer integration with external functions including partners, sub-contractors and customers requires commitment from all levels of the Company. Therefore, it needs time, endeavour and awareness of a number of structural processes including technology, power, people, culture and finance (Boddy et al. 2000).

Manufacturing enterprises, and in particular SMEs, which understand the requirements for effective contribution within an Extended Enterprise and have the organisational structure, systems and expertise to achieve it, may gain significant competitive advantage in the future.

4.4. The Formation of EE Reference Model

It has been argued that Extended Enterprise concept must be based on a top-down approach. Strategic management commitment is clearly one of the key factors. Hence it may be seen as one of the key drivers for successful implementation of the concept of Extended Enterprise.

Therefore, it is important to initially develop an appropriate framework. In order to promote a strategic move within an organisation there should be, first of all, clear identification of the "needs" of Extended Enterprise, in order to set a common ground for individual enterprise decision-makers and stakeholders, i.e. suppliers, partners and customers.

Having identified the needs of Extended Enterprise, the "criteria" for such a concept must be established. These criteria should identify the decisive factors of Extended Enterprise such as, the nature, the descriptions and the types of collaboration.

Finally, the "resources" for Extended Enterprise must be established. These entities can be put into an activity diagram, with the "needs" of EE as input, the "criteria" equated to control and resources equated to mechanism. Each of these fundamental characteristics will be discussed in detail in the following section.

Figure 4.6 illustrates the construction of this Extended Enterprise model based on an "ICOM (Input Control Output Mechanism)" activity representation diagram.

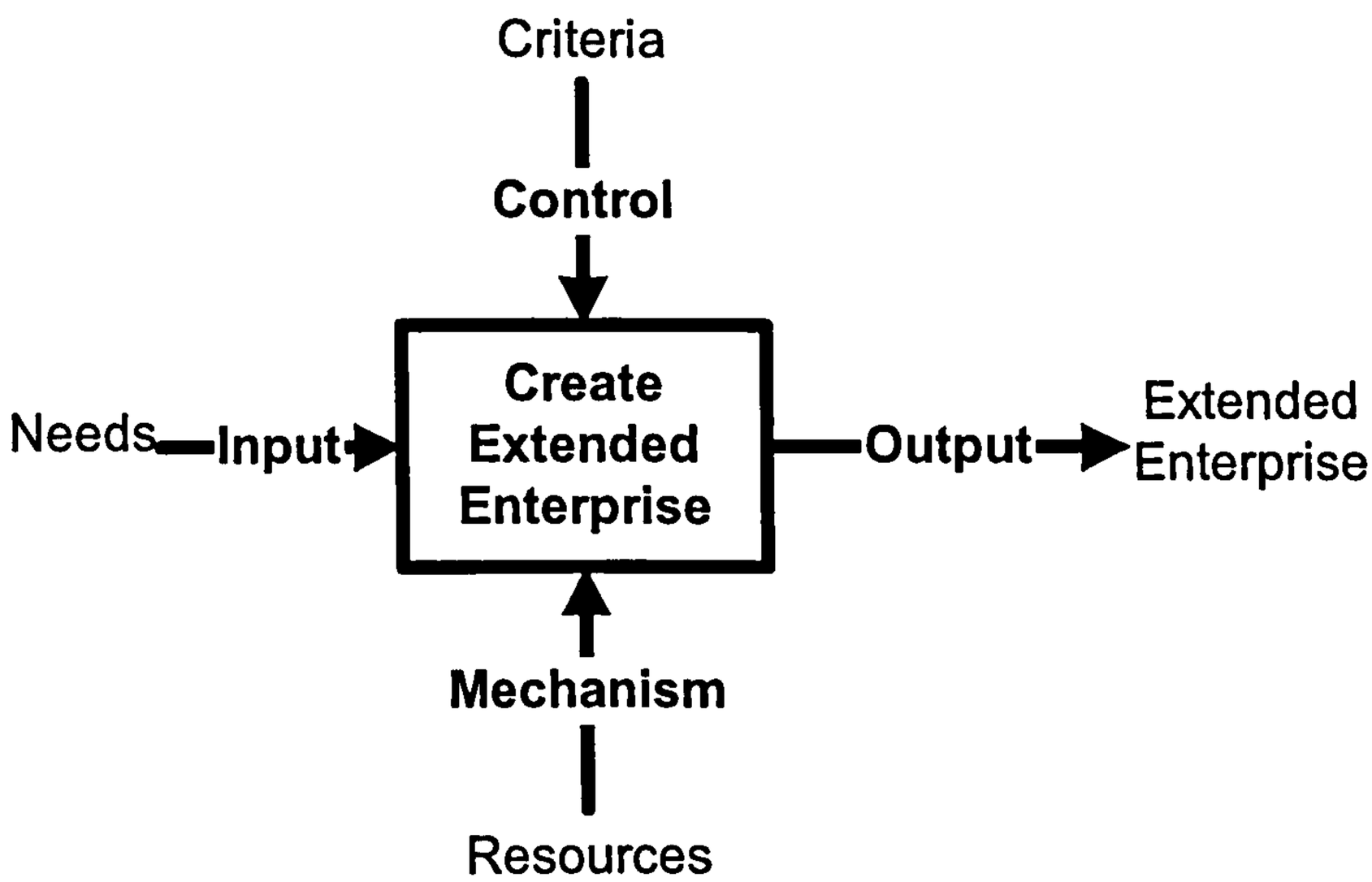

Figure 4.6: The formation of Extended Enterprise

4.4.1. The Needs of Extended Enterprise

The needs of EE are fed into the creation of EE as "input" (figure 4.6). This input represents some necessary conditions or states that need to be achieved. The following sections are the discussion of these needs.

4.4.1.1 Agility

The challenge of manufacturing industries is now about meeting higher variability of customer demand at the right time, with the right quantity, at the appropriate cost and the appropriate quality. The word that is frequently used to describe such a situation is agility. Due to limited resources available within each of manufacturing

enterprises to cope with such a situation, agility may be proposed as one of the needs that drive manufacturing industries to work closely with their partners.

Agility is a relatively new paradigm in the manufacturing systems environment. It was first introduced by the Iacocca Institute in a report entitled "Twenty First Century Enterprise Strategy: An Industry-Led View" (Nagel and Dove, 1991). The establishment of The Agility Forum followed it. This forum establishes several working groups that focus on "agility".

Preiss (1997) introduces the concept of four dimensions of agility, i.e.:

- Co-operating to enhance competitiveness
- Enriching customer
- Mastering change and uncertainty
- Leveraging the impact of people and information.

Figure 4.7 gives a diagram of such dimensions of agility.

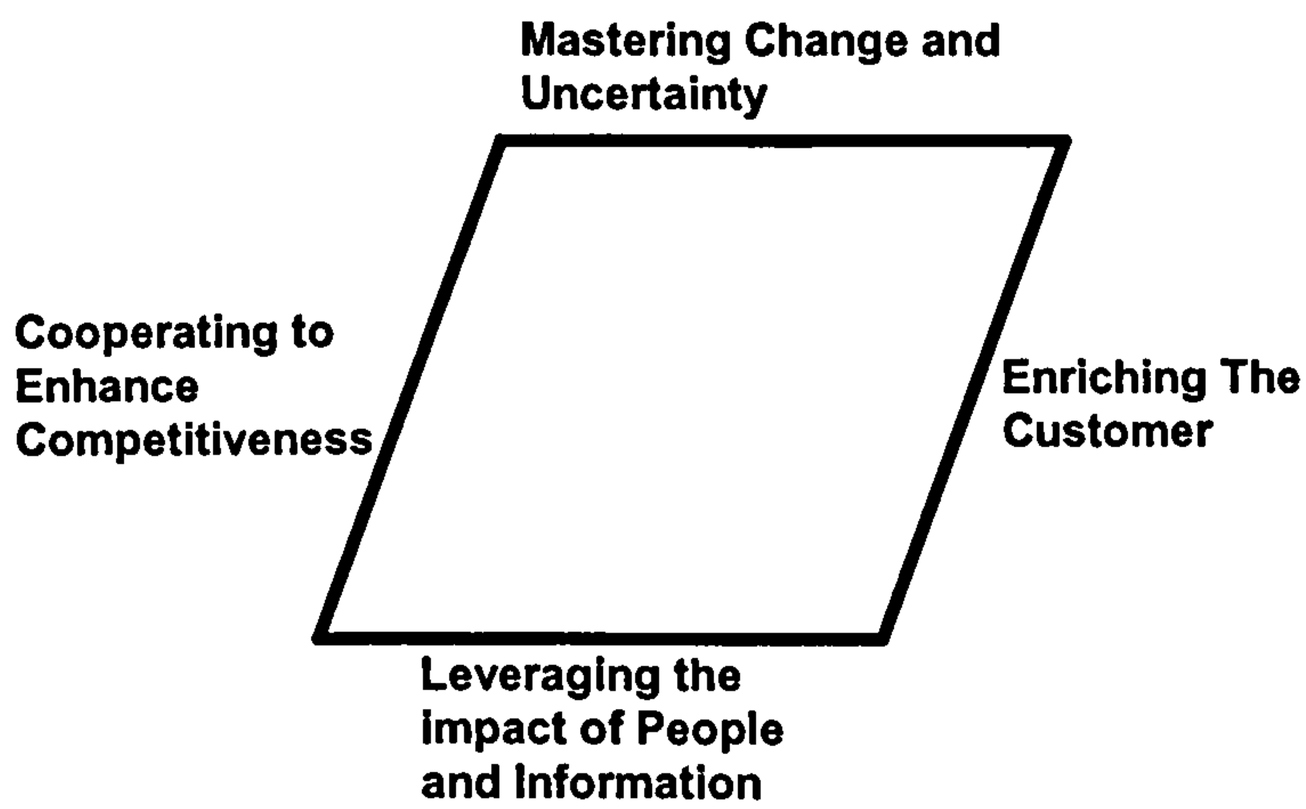

Figure 4.7. Four Dimension of Agility (Preiss, 1997)

Firstly, from this diagram it may be noted that people and information are the two factors that may be leveraged. It follows that to create an agile enterprise these two most important resources must be effectively deployed.

Secondly, the diagram illustrates the requirement of co-operation to enhance competitiveness through agility. This requires collaboration between enterprises as well as within enterprises.

Key features of this collaboration will include:

- Sharing of available resources
- Sharing of product development costs
- Shorter time to market
- Accelerated technical development due to technology transfer
- More efficient use of resources due to distribution of capacity
- Sharing of risk and building of trust within and between enterprises

To turn the above potential into real competitive factors, all participating enterprises need to rationalise and share combined resources, regardless of ownership.

On the other hand the output, enriching the customer, should be viewed in terms of outcome to the problem as a result of a process. This outcome may be products or services. A customer at the receiving end of this process should be treated well and be seen as one of key drivers towards a long-term relationship. The move towards mass customisation has made this relationship very important.

Agile manufacturing itself should live in an environment, which is regulated by a control dimension that is accommodating and takes competitive advantage from change and uncertainty. Therefore, to become agile, one needs to introduce relentless or continuous change that may be interpreted as continuous improvement (Kaizen).

The organisation itself, as a consequence, must be flexible in order to accommodate the need of rapid change. This may be difficult to implement in an organisation that involves many disciplines covering a very wide range of skills and expertise.

It may therefore be appropriate to suggest that companies participating in an Extended Enterprise environment should focus themselves not only on their own core competencies, but also on their role in EE. A discussion on how to perceive core competence is elaborated in the following section.

The last component within the four dimensions of agility is the mechanism, leveraging the impact of people and information. People and information may be recognised as the two most valuable assets within an organisation. People (employees) need to be continually educated and trained to facilitate a life long learning so as to promote and encourage innovation and creativity.

They also need to be given responsibility within cross-functional teams to enhance their abilities to work in a multi-disciplinary/multi-company environment. They must develop the ability to handle different working cultures, so that when needed, they may be assigned to work with partners' staff.

4.4.1.2 Goal Integration

EE may be viewed as a network of enterprises that has a number of sub-systems boundaries. These sub-systems boundaries separate EE members with their respective supply-chains or other external entities.

Related to system boundaries are goals. Sub-systems within the boundaries with respect to EE may have conflicting goals. Goals may change as system boundaries change, and goals could depend on the person setting the system boundaries (Schoderbeck, et al., 1990).

This means that system boundaries with respect to EE may be established according to goals being set. To alleviate this problem, the systems approach defines the goal of a system at the meta-level. All sub-systems are to support the goal of the meta-level.

The systems approach also stresses the importance of goal attainment. A system exists to serve a purpose or to achieve a goal. A systems approach focuses on

optimisation and goal achievement serves to facilitate system optimisation. Optimising the system as a whole rather than sub-systems requires the problem and the goal to be stated at the meta-level with each sub-system goal in support of the meta-level goal (van Gigch 1991).

Optimising the meta-goal undoubtedly means that sub-system goals will be less than optimum. The synergistic effect of sub-system goals will not provide an optimum meta-goal.

Development of enterprise goals is the process of decomposing the vision and mission into discrete future conditions of the enterprise. It is controlled by the issues, constraints and assumptions discovered in the environmental assessment, the values revealed in the development of the strategic purpose, the environment, and the commitment to excellence.

Goals are developed to focus on activity and/or process. Goals focus attention on specific conditions and direct organisational effort towards certain outcomes. They express what is important to the organisation. Activity by itself means nothing; it is actually an expenditure of resources. Therefore if these resources are not focused, they may be wasted.

Indeed, one of the key facets of EE is the way in which the Meta goals of EE are identified and the management process by which the sub-system goals of the individual partners are subsumed within these goals.

As discussed previously, goal sharing and ultimately, goal integration has been perceived as one of the key indicators of the successful implementation of Extended Enterprise concept (section 4.3).

Basically, the concepts of Extended Enterprise emerge as the business attempts to pull together all manufacturers' external resources. These external resources are quite often situated in globally dispersed locations.

The fundamental philosophy behind this concept is to make use of all those external resources without actually owning them. However, in practice this concept may lead to a conflict between the participating organisations, since each and every one of them has its own (stakeholder) goals while at the same time needing to support the goals of its Extended Enterprise partners.

One way to overcome this problem is by rationalising their goals and business objectives. That is through the arrangement of mutually beneficial links in terms of co-ordination in the product design, manufacturing planning, new product development, manufacturing processes and costing between the participating manufacturing enterprises.

As such, this formation may be recognised as one of the main features of, as well as, a potential barrier to Extended Enterprise.

Strategic objectives are usually linked to business processes. Goal integration within EE may be argued to be a strategic objective since it has to have top management commitment. It follows that goal integration should also closely linked to business process.

This business process must be the one that is "core" to an enterprise. The integration of goal of different enterprises that may or may not have the same core processes will require top management commitment and also a management system to ensure goal identification and to monitor the attainment of this goal across EE.

4.4.1.3 Core Competence

Teece (1982) introduced the definition of core competence as follows:

> *"A set of differentiated skills, complementary assets, and routines that provide the basis for an enterprise's competitive capacities and sustainable advantage in a particular business"*

Jagdev and Browne (1998) suggest that Extended Enterprise extends beyond traditional organisational boundaries. It implies that within Extended Enterprise concept a business organisation must see itself as part of a larger process since Extended Enterprise is responsible for the whole product life cycle. Therefore, instead of focusing on its own internal capabilities, each member of Extended Enterprise should focus on its own core competence.

Core competencies as they relate to those appropriate for Extended Enterprise, according to Jagdev and Browne (1998) are those competencies that are central to the achievement of the enterprise's business objectives and which deliver low cost or product differentiation.

It suggests that the manufacturing enterprise should consider outsourcing or subcontracting non-core competence products or services. It also implies that manufacturing organisation may take advantage of external competencies and resources without essentially owning them.

However, research by Prahalad and Hamel (1990); Quinn (1992); Stalk et al (1992); and Tampoe (1994) suggest that approaches by enterprises consistent with an emphasis on core competencies and key capabilities with respect only to purchasing strategy have resulted in many enterprises reducing the degree of vertical integration. It has also been found that it raised the relative cost component of externally sourced goods and services, i.e. if we can buy it cheaper than making it we will buy it rather than make it. Gunn (1987) has also predicted this.

Moreover, work by Stuart (1997) strongly suggests that companies should be outsourcing as far as possible any activity, which is not seen as a core competence. He goes on to say that in addition to the well-established make-or-buy decision in which the relationship with the partners must be considered, there should also be another three decision areas,

1. **New product and service development**
   Partners can be seen as a vital source of new technology, providing expertise in fields such as new processing techniques, new materials, or technological forecasting.

2. **Value analysis/value engineering programme**
   Partners may also assist in giving advice and ultimately in deciding whether or not to replace materials, which may be in critical shortages, with less expensive substitutes based on a traditional value analysis or value engineering programme.

3. **Supplier management and governance choice**
   Suppliers should be managed adversarially, with the only contact being short-term negotiations over particular purchases, or as a strategic alliance, leading to a long-term partnership and integration of strategy.

It may be difficult for companies at the lower value end of the supply-chain to bring about the type of relationships they would wish. If a supply-chain or strategic alliance is to succeed it should not be limited to purchasing strategy, but instead each member should focus on its own core competence.

This is supported by Miles, et al. (1999) who argue that strategic alliances provide a number of advantages, including faster market penetration, sharing of financial risk, possibilities of technology transfer and increased production efficiencies.

Furthermore, Changchien and Shen (2001) suggest that strategic alliances require complementary core competencies in each of the individual organisations so that each can benefit from such collaboration.

Detailed discussion on core competencies with respect to its relationships with resources and capabilities, which leads to identification of core processes and their development/ management, is presented in section 6.2.

Hence it may be concluded that the key needs of Extended Enterprise, are core competence, goal integration and agility and that they must be co-existent within the reference model of Extended Enterprise. This relationship is shown in figure 4.8.

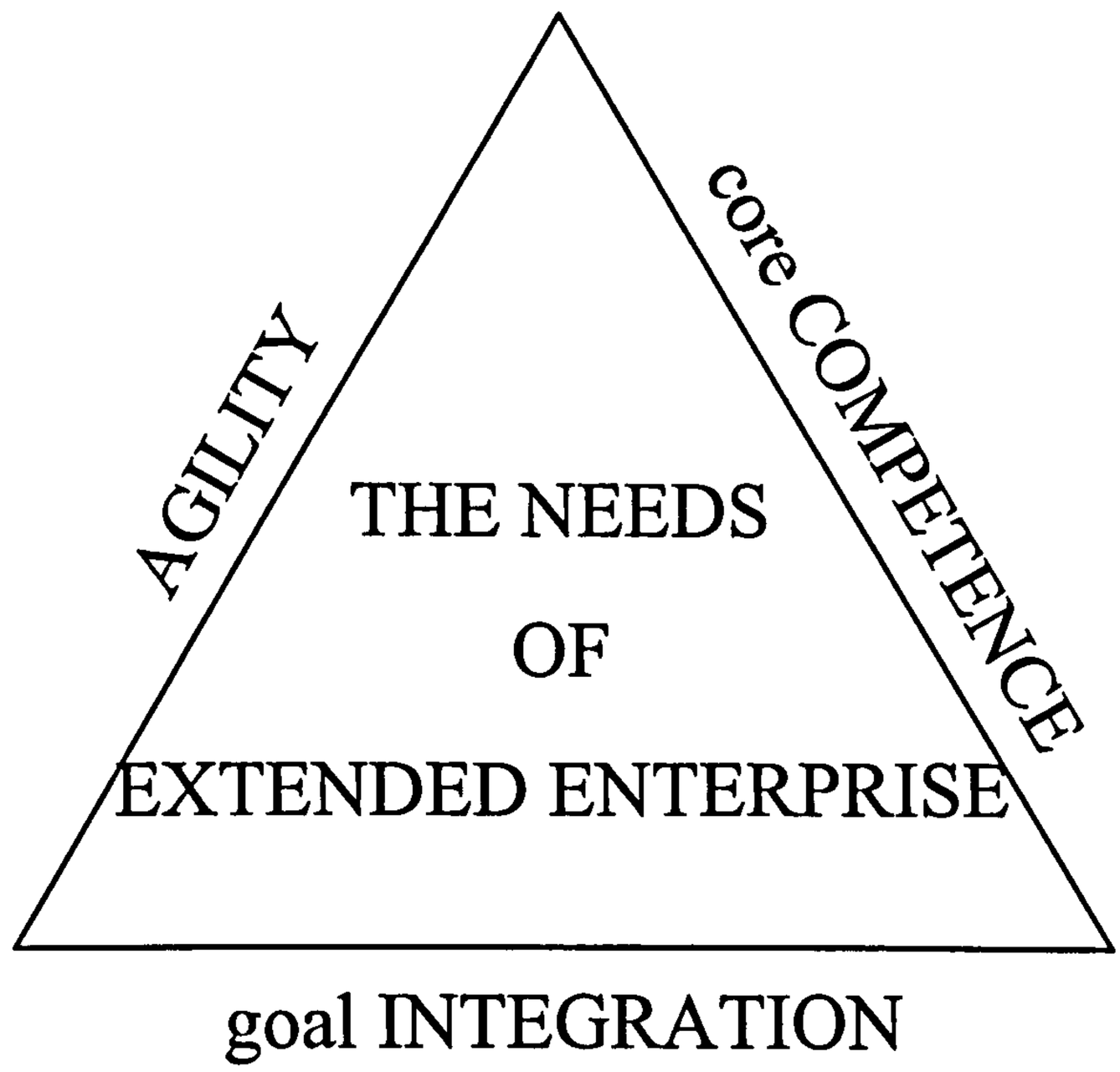

Figure 4.8: The key needs of Extended Enterprise

Having identified the needs of EE, consideration will now be given to identifying the criteria of the organisation, which will satisfy these needs. This will provide a basis for distinguishing EE from other forms of enterprise structure. The following section addresses the criteria for EE.

4.4.2. The Criteria of Extended Enterprise

The criteria of EE may be equated to "control" for the creation of EE (figure 4.6). They describe the conditions required for the operation of EE.

The first criterion of Extended Enterprise is that it is classified as a virtual organisation. Increased global competition is now replacing national competition due to open markets and reduction in trade barriers. Production means, i.e. engineering capabilities, production technology, investment/financial support, and

marketing information are increasingly accessible through the world regardless of national or state boundaries.

Today, products may be designed and developed in England or France, engineered for production in Holland or Germany and then manufactured in China or Indonesia, to be marketed in Australia. It may be seen that manufacturers situated in geographically dispersed locations are building partnerships with companies in equally dispersed locations, to gain competitive advantage.

The formation of closer co-ordination in the design, development, costing and respective manufacturing schedules of co-operating independent manufacturing enterprises and related suppliers, is termed "Extended Enterprise" by Jagdev and Browne (1998). They go on to say that this form of collaboration is represented by the formation of mutually beneficial and formal (electronic) links in terms of co-ordination in the design, development and costing between the co-operating and independent manufacturing enterprises.

This collaboration is supported by extensive use of IT within respective enterprises and electronic communications among the collaborating enterprises. Communication and exchange of information among participating enterprises may be very intense so that they may consider themselves "virtually" within one organisation.

Hence, one feature of Extended Enterprise is that those companies that participate in Extended Enterprise see themselves as virtually belonging to the same enterprise.

The second criterion of Extended Enterprise is that participating members remain independent organisations. Many of today's manufactured products are very intricate. Hence, there are few companies, which have the necessary expertise and resources to completely design and manufacture them, in-house. The result is that most companies are dependent upon others for vital elements of their process. These companies usually have some choice as to which companies they become dependent upon and for what sorts of resource/expertise or competencies.

Larger enterprises may resolve the difficulty either by acquiring other enterprises or subsidising smaller enterprises that have the needed competence. Joint venture or collaboration is the strategic approach for many manufacturing enterprises to acquire crucial competence to support their business.

Skyrme (1996) when discussing the virtual enterprise suggested that those individual members participating within a virtual enterprise should retain their independence and continue to develop their core competence. Hence for the purpose of the reference model, each partner will be assumed to remain an independent and separate entity. They still have and maintain their own independent internal strategic and policy decision-making, based on their stakeholders' direction but within an integrated framework for EE.

This is an important issue, since there appears some practice exercised by larger conglomerations or groups of enterprises in the past to gain corporate success at the expense of smaller member enterprises. Within Extended Enterprise environment these independent smaller enterprises are able to satisfy their partners' aspirations while at the same time fulfilling their stakeholders' objectives.

The third criterion of Extended Enterprise is that the collaboration or partnership is project based. Skyrme (1996) when describing the virtual enterprise stated that the relationship might reshape its members and they may change according to the nature of the collaboration in hand.

This implies that the composition and the role of participants in EE will change in response to the market and other circumstances hence its status as a virtual enterprise and one which is best managed using an integrated project-oriented approach.

Projects and their entire related characteristic, such as well-defined tasks, a start and finish date, and a given amount of resource are increasingly common. Therefore there is a need for improved systems and tools to control and co-ordinate several parties so that they may work towards a common goal. This has been a common

practice for project work within a Company but this may also be applied to project work involving collaborating parties from different companies.

Given the basic requirement for goal sharing and goal rationalisation across EE, the concept of programme management is appropriate. The Central Computer and Telecommunications Agency (CCTA) give their definition of programme management as:

> *"The co-ordinated management of a portfolio of projects to achieve a set of business objectives".*

However, from a multi-project organisation point of view, programme management may be seen as the directing of a portfolio of projects, which benefit from a consolidated approach. Sometimes the projects are much more directly aimed at corporate goals - opening a new factory or launching a new product for instance.

The common elements of the projects are that they run simultaneously or at least overlap with each other, they share resources and are designed to generate income. One project being cancelled does not necessarily change the organisation's general direction.

It is implied that the success of an implemented project will have a direct impact on long-term strategic objectives, i.e. programme management and hence create long-term relationships especially with key customers.

Browne and Zhang (1998) support this argument when describing major characteristics of Extended Enterprise. They state that the manufacturer in the manufacturing centred Extended Enterprise, develops long term relationships with key customers and treats them as important business partners.

Sako (1992) introduces an Obligational Contract Relationship with regard to long-term or committed relationship that is a relationship, of co-operation and long-term commitment based on three different types of trust between the enterprises involved, namely:

- **Contractual trust**

  That is the keeping of promises, such as delivering or paying on time or keeping confidentiality. This kind of trust will normally build up after a long-term relationship.

- **Competence trust**

  This depends upon the technical and managerial competence of the Company to perform a function such as to deliver components within the specification. For instance, a high competence trust would exist where a supplier was allowed to make deliveries straight to assembly line without inspection.

- **Goodwill trust**

  Here a partner is trusted to take decision without unfairly exploiting the other partner. As an example a partner who was able to take initiatives to exploit new opportunities beyond those originally agreed would developed goodwill trust.

Those three types of trust may develop as the enterprises work together over time, although Child (1998) argues that some trust may arise from reputation. He goes on to say that to develop the closer relationship needed for ongoing close relationships in Extended Enterprise, goodwill trust must be developed.

Given the fact that reputation or trust usually follows a longer-term partnership or collaboration then it may be proper to say that Extended Enterprise should be based on a long-term strategy rather than a short-term one.

To summarise, Extended Enterprise should be in the form of a virtual organisation, with participating members remaining independent and the relationships being project based but with an emphasis on long-term relationships.

Figure 4.9 illustrates the criteria of EE in the context of the key needs of EE developed in section 4.4.1.

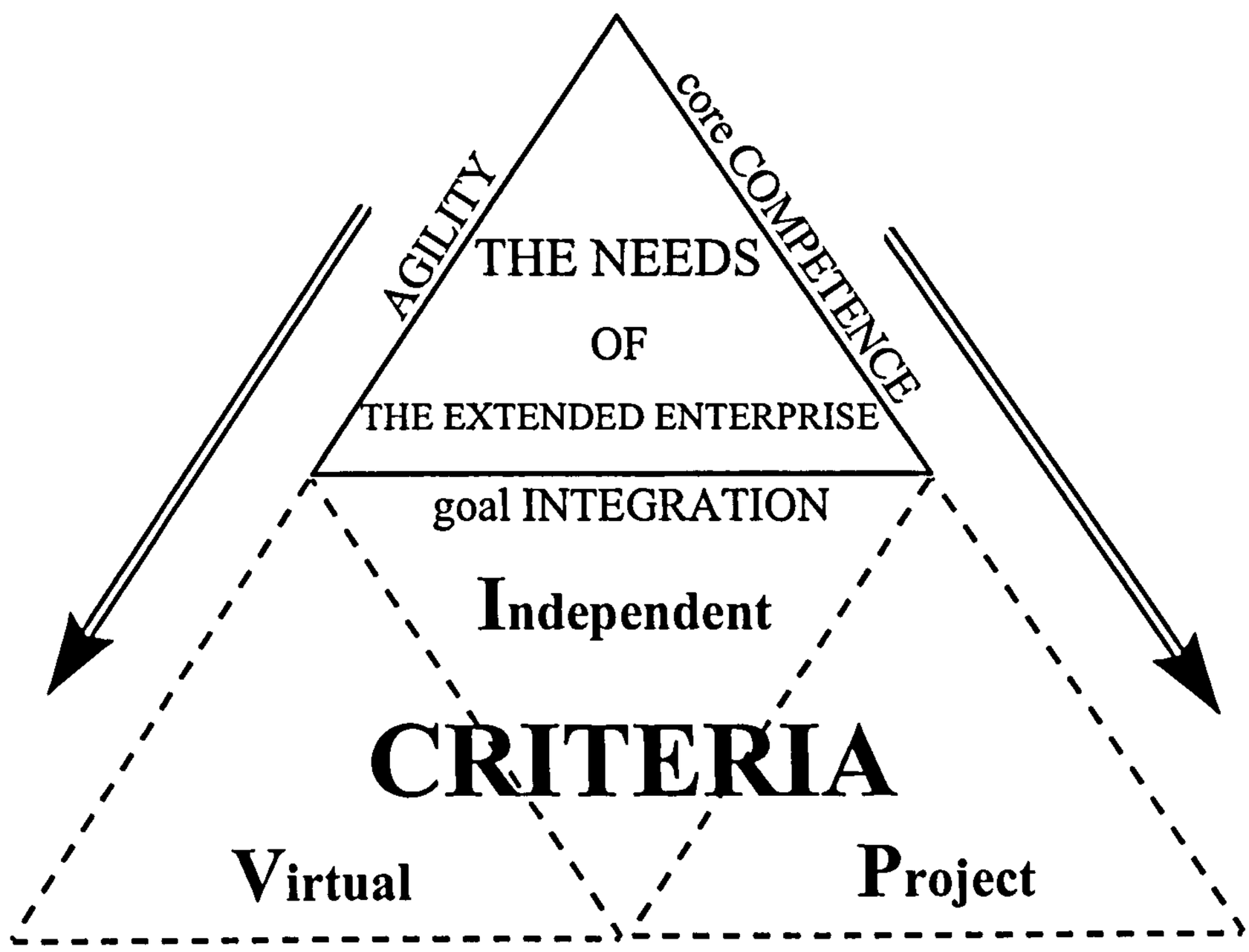

Figure 4.9: The criteria of Extended Enterprise

4.4.3. The Resources of Extended Enterprise

The resources of EE may be equated to "mechanism" for the creation of EE (figure 4.6). Having defined the criteria of Extended Enterprise the next step is to address and classify the resources required. It is the nature and organisation of resources of EE that will satisfy the criteria for EE and in turn the needs of EE. These resources function as a "mechanism" for the creation of EE. Such mechanisms will be used to provide and develop enablers, while at the same time may also be used to remove barriers or convert them into enablers.

Technology

An enterprise, when viewed as a collection of processes, may also be viewed as a collection of technologies. In actual fact every enterprise may utilise a large number of technologies.

Everything an enterprise does entail technology of some sort, although only one or two technologies may appear to dominate its product or its production processes. The significance of a technology for competitive purposes is not always necessarily a function of its merit or its distinction in the physical product. An enterprise's technology is often interdependent with its customers' technology as well as its suppliers' technology.

Technology transfer, therefore, may be seen as one of the co-ordinating bonds between participating companies, within an Extended Enterprise framework. This is particularly true when they are dealing with high technology environments as found within the case companies. Naturally, the instinct of enterprises involved in "hi-tech" areas is to guard their technology.

However, these enterprises need partners in order for them to fully exploit their competitive advantages. As such, working with partners and sharing technology or technology transfer amongst them becomes essential.

Most modern production processes require the implementation of advanced technologies; as such, it is often impossible for a single enterprise to provide them "in house". Enterprise collaboration and partnership may facilitate the sharing of both physical resources and expertise.

Consequently, it may lead to cost efficiency and effectiveness for the participating enterprises involved in such practice. It may also encourage shared resource development while at the same time focusing each participating enterprise to its own core competence.

This suggests the need for an EE structure, which allows participants in EE to identify the core competencies required for EE, where the competencies will reside in EE and how they can be effectively deployed. As suggested in Chapter Two the existence of such an organisation structure may be regarded as an indicator of EE. A proposed model for such an organisation structure is presented in Chapter Six of the thesis.

Technology is also an enabler for inter-enterprise networking. The implementation of e-commerce has been enabled by major developments in Intranet, Extranet and Internet based technology.

Consequently, it provides an integrated information and communication backbone for enterprises from all over the world. However, this technological integration increases the importance of effective frameworks for communication, from strategic levels to operational levels i.e. communication between people rather than simply systems.

The following are some characteristics of technology, as "enablers" for EE, drawn from the review of current practice and case companies' experience:

1. **Technology transfer.**

   The deployment of high technology usually requires a big capital investment. It may be feasible for companies participating in EE to share such investment. For SMEs, normally with very limited capital resources, it will be a significant help.

   However it may also imply that as well as investment sharing, technological risk is also to be shared among members. This is the situation found in the Case Company A during one of its projects, following a sharing of staff, which resulted in technology transfer between the two companies (section 3.4.)

2. Information Technology

Browne et al (1995) suggest that manufacturing research must provide greater emphasis on total manufacturing business systems development. They believe that if this is coupled with the information and communication technologies now becoming available, then it is the best way to enable manufacturers to realise the competitive gain demanded by the market place. The information and communication technologies are becoming key enablers in gaining competitive advantage.

Extensive use of IT is said to be a feature of Extended Enterprises (Bloch and Pigneur, 1995; Jagdev and Browne, 1998). Today Information and Communication Technologies (ICT) development may provide leverage for redesign of the inter-organisational relations and may allow the participating enterprises working within EE to:

- Link and bridge communications among different sites world-wide,
- Reduce the number of physical meetings,
- Provide a platform for supporting effective Engineering Change Management (ECM),
- Improve their information gathering about their out-of-boundary environment (business contacts and opportunities, market intelligence, statistics),
- Establish EDI-based partnerships with their customers and suppliers,
- Access electronic markets and platforms along with their competitors,
- Provide a standardised electronic communication media.

3. **Joint Research and Development**

   R&D is one of activities intended to keep a Company ahead of its competitors. An R&D department normally handles this activity within a larger Company, whereas in a smaller Company it is often part of design related activities. Most manufacturing SMEs have very limited resources for R&D.

   Therefore, they may need to collaborate with other larger companies to keep pace with advanced technology. Such collaboration, which may be in the form of joint research and development, may be viewed as a key enabler of EE.

Organisation

A new inter-enterprise (networked) organisational structure should be introduced in order for Extended Enterprise practice to take place. Miles and Snow (1992) suggest that there are three varieties of the emerging network form of organisations, each of which has its own dominant logic. They are as follows:

1. **Stable network of enterprises.** This has a variation of the functional organisation logic. It also has centrally co-ordinated specialisation with a small set of independent parts that maintain their competitive fitness by serving enterprises outside the network. This stable network form was designed to be effective in predictable markets and is aligned along a given product or service value chain.

2. **Internal networked enterprise.** This is a network where the element parts were not independent but commonly held even though they also would maintain their competitive fitness by serving enterprises outside the organising enterprise.

3. **Temporary networked enterprise.** This type of network stressed organising along the value chain and emphasised the independent nature of the parts so

that the actual network, may be seen as a temporary/dynamic alliance from a large pool of potential partners. Given the definition of EE introduced in Chapter Two, this latter structure appears to be most appropriate.

It may also be noted that many failures in the use of organisational forms were a result of the inappropriate extension of the form, beyond the logic that supported the creation of the organisational form in the first place. Each of these forms addresses ways of allocating limited resources. However none of these forms really addressed the change in organisational philosophy brought about from core competence and goal integration perspectives.

The concept and mechanism of inter-enterprise relationships, such as Supply-Chain Management (Supply-Chain Council), where boundaries between participating enterprises still exist, needs to be augmented.

Extended Enterprise concept attempts to eradicate these boundaries between enterprises by developing and deploying a mechanism, such that the participating enterprises will view themselves as being "virtually" within the same organisation. However, each and every one of these enterprises still remains an independent enterprise.

The primary enterprise, i.e. "an enterprise with direct or primary contact with customers and clients, for the provision of products or services", may be a larger enterprise or small enterprise or may even be a "micro enterprise".

For EE there will be no larger enterprise domination practice over the smaller one. The Case Companies revealed examples of each situation i.e. Case Company A is an SME. This Company is highly specialised in precision moulding design and one of its major customers is one of world's top electronic communication hardware companies. Due to its expansion of product range this larger Company had to acquire expertise and capacity in an area, which could be regarded as core competence.

In doing so the SME has taken the opportunity to progress from being just a supplier of precision connectors to become the partner of the larger Company, i.e. by taking full responsibilities for a particular component (colour ink jet compartment) right from design to manufacture.

An SME within an EE organisation structure may be seen as a node within an agile, virtual manufacturing organisation, with nodes being selected and organised around a hub (primary) enterprise, in line with a particular project (product). Therefore, traditional static forms, for instance organisational charts, cannot describe the dynamics of EE.

Within the Case Companies, inter-company transfer of staff has taken place in support of mutually beneficial activities, i.e. multi-organisational rather than simply multi-disciplinary teams. As such, the traditional organisational barriers have been "virtually" lifted in order to achieve a better and more effective function of Extended Enterprise.

Examples were also found of inter enterprise protection of information and processes i.e. barriers to transfer of technology and rationalisation of core competencies.

People

People are regarded as the most important and flexible asset of the enterprise. They should be well educated, highly trained and at the same time also highly motivated. It has been argued in the previous section that the development of EE organisation structure requires people with more than just engineering or managerial skills.

People must also develop interpersonal skills that allow them to work together in multi disciplinary teams, which include people from other organisations. Differences must be accommodated and co-operation expanded to achieve common goals. Company A has gained a very significant benefit from such people during their colour printer cartridge development project.

People must also have the initiative to set objectives and to develop the multi skills that enable them to achieve those objectives. The unique characteristics of EE depend upon the capability of its people not just as individuals but also as a team. This implies that SMEs staff involved in EE practice must be willing to accommodate a cultural change.

Within Case Company B, failure to practice integration with respect to integration of systems for CIM was clearly the result of the culture and an inability to accommodate change. The situation resulted from a performance reporting culture, which encouraged the pursuit of "local", rather than "global" objectives. Within an Extended Enterprise environment this needs to be changed.

The role of supervisor will be changed from the provision of directing and controlling functions to providing consulting, communicating, and supporting functions. Since each organisation structure will tend to be very flat, the number of supervisors will also be reduced. It may be argued that this will affect the people within the organisation, i.e. employees as well as management.

Information and communication

Information, as well as the communication systems and technologies used to gather it have been regarded as the "blood" of Extended Enterprise (Kelly, Little and Adesta 1999). Systems must pass information amongst participating companies within an Extended Enterprise, virtually from wherever partners are operating.

The availability of such systems and technologies as internet, intranet, extranet, and satellite communications will enable them to communicate and interact more effective and efficiently. Effective use of such systems beyond the confines of a single firm is a clear indicator of EE.

The issues of information integration have been recognised as a key factor in the design and implementation of CIM (Hashemipour, et al., 2000). It follows that CIM will also be an important element of EE. Therefore, the implementation and

deployment of CIM within EE needs to be extended to cover all of EE members. Discussion of CIM is presented on section 4.5.

Culture

Culture affects the way in which people consciously or sub-consciously think, feel, and then act towards the environment. Therefore, it may be argued that for people who are used to working within a traditional enterprise culture it may be difficult to cope with a radically new enterprise culture.

Some effective strategies to change culture have been identified from the Case Companies (section 3.5) and include the following key issues:

1. Education and training
2. Progressive change to team rather than functional organisation
3. More open approaches to strategic management
4. Increased employee involvement in decision making – and in particular the development of integrated communication systems
5. Human resource systems – where employees are encouraged to have a strong sense of belonging

The culture of working in a single confined department must be changed to a culture of "open space", flexible communication and activity. This culture should support the shift from pursuit of local optimisation and local goals to global optimisation and the pursuit of mutually agreed "extended goals".

Hence, it is suggested there are five resources of Extended Enterprise:

1. Technology
2. Organisation
3. People
4. Information & Communication
5. Culture

This thesis puts emphasis on organisational structure for Extended Enterprise for two main reasons:

Firstly, having carried out a Strategic Planning Procedure (Chapter Five) with respect to Case Company A, it was found that organisational issues were perceived to be of primary importance with respect to the development of the long-term partnerships of Company A. This perception was common to Company A, its partners and the author.

Secondly, one of the objectives of this work is to develop an organisational structure for EE, which provides effective identification, rationalisation and deployment of core competencies and satisfies the requirement for goal integration and agility (section 1.3). The proposed organisation structure for EE is discussed in Chapter Six.

Putting together the five Resources as the base of the triangle, a complete view of Extended Enterprise reference model can be seen. The Triangle of Extended Enterprise reference model has now been completed as shown in figure 4.10.

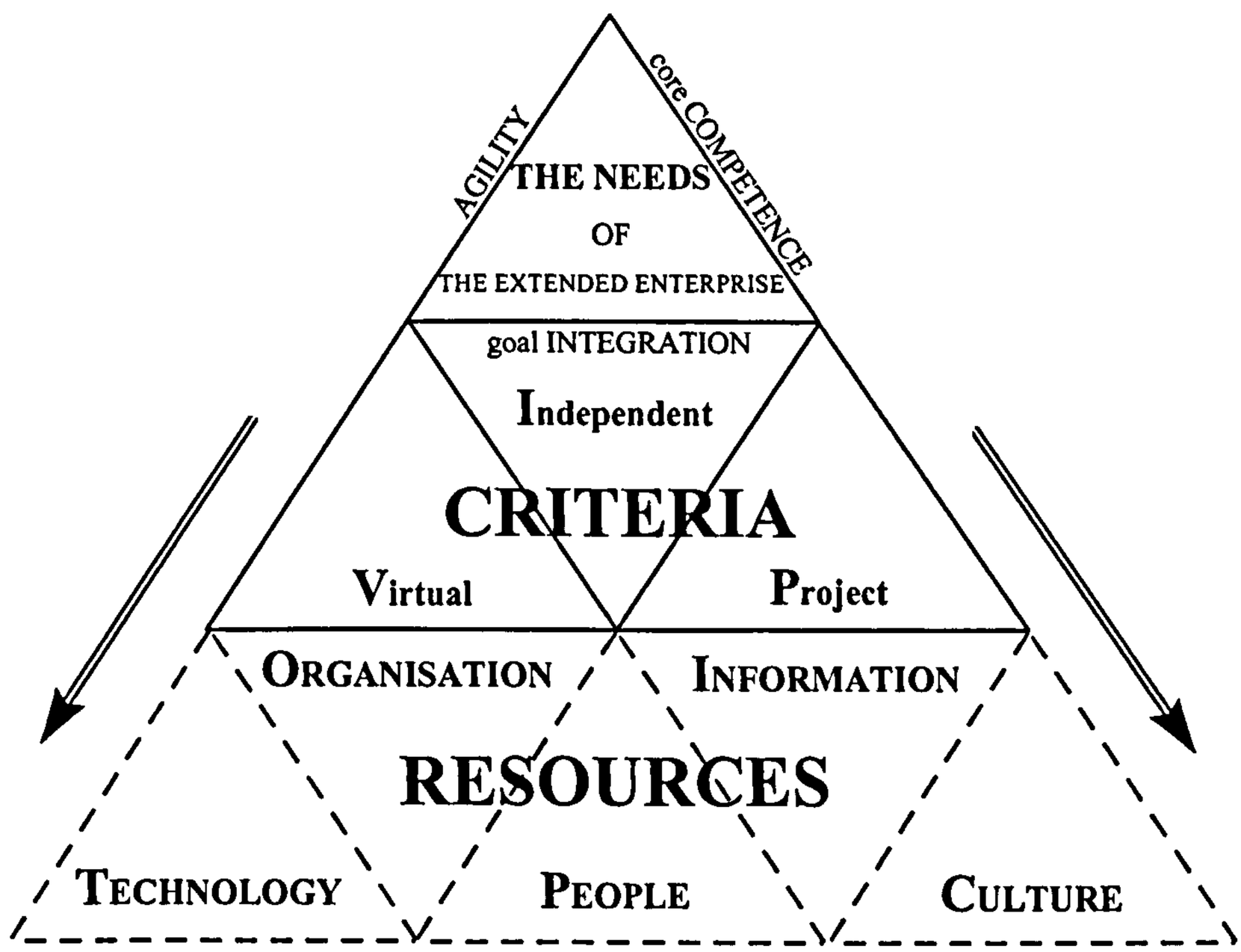

Figure 4.10: The Triangle of Extended Enterprise

In contrast to the more conventional approaches such as Supply-Chain Management and inter-enterprise integration, where the boundaries between members still exist, this Extended Enterprise reference model has lifted these boundaries. Hence, within this reference model, Extended Enterprise may be seen "virtually" as a single enterprise. Sharing of the resources mentioned above within Extended Enterprise is the bonding between each participating organisation.

The mechanism to bond these enterprises is through the rationalisation and deployment of core processes. A proposed organisational structure to support effective identification, rationalisation and deployment of core processes is introduced in Chapter Six and is centred upon the core competencies, which underpin the processes of EE.

4.5. CIM as the Spine for Effective Operation of Extended Enterprise

Computer Integrated Manufacturing (CIM), discussed in section 2.2, has existed as a concept for about three decades, after Harrington first introduced the concept in 1973. The use of computing technology and computer-based systems to assist manufacturing system integration has been widely appreciated and researched by manufacturing practitioners as well as academics.

Its strategic functionality as one of modern manufacturing system tools has been widely recognised. However, the rapidly changing needs of global markets and customer oriented manufacturing together with the introduction of Supply-Chain Management, have pushed CIM to extend its system boundary beyond that of the enterprise. Therefore, CIM may be seen as one of the tools or enablers for manufacturing enterprises to support EE.

The keyword in the implementation of CIM is integration, yet many companies still maintain departmental boundaries (Hardaker and Ahmed, 1995). They go on to say that the elimination of barriers is the heart of integrated manufacturing. Therefore, it

may be argued that to fully utilise the implementation of CIM within Extended Enterprise it is necessary, first of all, to eradicate these barriers.

One way to achieve this is by introducing the concept of "virtual" organisation, where all participating firms are viewed as being in the same enterprise. Hence, CIM is used to describe the process of integration of all the elements involved in manufacturing by means of IT techniques.

With this in mind there is a need to provide a definition of CIM for Extended Enterprise. CIM in the context of this research and with respect to EE may be defined as:

> *"An approach to perform integrated manufacturing functions using an integrated information and communication structure, between members of Extended Enterprise to achieve shared strategic objectives."*

From the above definition it may be seen that CIM cannot be bought, in fact Extended Enterprise must be able to design, then structure and subsequently deploy its own CIM system to serve its purpose.

However, it must also be understood that in designing a CIM system, EE may encounter difficulties such as:

- **System complexities,** which will involve not only technical aspects but also procedural, social, and cultural aspects.

- **Constraint on necessary resources,** which may be needed to design such system and may not be found in a single person or organisation - CIM is a group effort.

- **Restricted amount of information available,** due to company's policies i.e. the commercial sensitivity of information and on data security and protection.

This research proposes a conceptual CIM "spine" to facilitate information and communication infrastructure between members of Extended Enterprise. However, due to the complexity and amount of work and time, which would be required to provide the detail of such CIM system architecture, the detailed design of such a system has been considered as beyond the scope of this work. Work is currently being carried out by the Manufacturing Systems Research Group (MSRG) at the University of Huddersfield with respect to the development of a more detailed CIM architecture through the design and implementation of appropriate Product Data Management (PDM) structures.

CIM is addressed in the form of a general strategic framework of information and communication within this thesis, in order to understand the philosophical view for its deployment and development within EE organisational structure.

4.6. CIM Methodology

Methodology may be seen as a set of methods, which involve the use of reference models and related architectures including modelling procedures and their associated graphical tools. The reference model itself is a very important aspect in CIM. There is no worldwide-accepted definition for architecture. However, architecture of CIM systems may be defined as a structured set of models, which represent the invariant building blocks of the whole CIM system.

It has been stated in Chapter Four that a model is an abstract, simplified representation of reality. Therefore a manufacturing model may only represent a set of selected elements concerning the domain being studied and in agreement with the defined objectives.

In Chapter One it was stated that one of the objectives set out for this research program was to develop an Extended Enterprise reference model, which focuses upon integration at the strategic level rather simply at the interface of sub-systems such as CAD/CAM, CAE, MRP, MRP II, etc.

Therefore, the outline CIM model suggested for this program of research is to support Extended Enterprise reference model, which has been addressed and defined in section 4.4.

4.7. CIM Reference Models

There are many well-known reference models for CIM. The Computer Integrated Manufacturing Enterprise (CIME) wheel, introduced in 1985 by the Society of Manufacturing Engineers (SME) and New Manufacturing Enterprise Wheel introduced in 1993 by the same organisation are the most relevant to this research work. It provides a basis for development of an extended CIM wheel for Extended Enterprise. The following sections are brief discussions revisiting those two wheels.

Computer Integrated Manufacturing Enterprise (CIME)

This wheel provides a major benefit in viewing the manufacturing system as a whole, as opposed to the "traditional view" of discrete departments and divisional hierarchy. It provides a means of viewing manufacturing as a boundary-free environment, both vertically and horizontally. However, it may be argued that to relate effectively in to today's manufacturing environment it requires further development.

The CIM wheel, as shown, omits one very important link in integration, that is integration between the enterprise internal capabilities/systems and its suppliers and/or customers. Also, Hannam (1996) argued that since manufacturing strategies have developed since the wheel was introduced the wheel in some degree might not be relevant. He illustrated that the quality function has moved from being a separate function, it is now integrated into all activities of a Company.

New Manufacturing Enterprise Wheel

This new wheel is an improvement, given its generic characterisation of functional communications and connections as well as its relative simplicity. However, manufacturing enterprises world-wide are increasingly adopting the concept of

Supply-Chain Management (SCM), therefore interactions and links with suppliers and also with customers are becoming more and more substantial.

This wheel does not fully describe and accommodates those relationships. Moreover, these relationships must be developed further in terms of integration across the value chain, as stated by Browne, et al (1995) in their definition of "Extended Enterprise" (EE). Also missing from this wheel are the aspirations and needs of an enterprise, i.e. its goals.

It is very important for every participating enterprise to determine and communicate its goals/aspirations and its needs, then common ground may be established with other enterprises within the partnership. Therefore an extended CIM wheel for Extended Enterprise needs to be developed.

Discussion of CIM and both the Computer Integrated Manufacturing Enterprise (CIME) and the New Manufacturing Wheel was presented in section 1.1 and section 2.2. The following section describes the development of a proposed conceptual CIM spine for EE, together with a revised CIM wheel.

4.8. Development of Conceptual CIM Spine for Extended Enterprise

The concept is centred on the needs of Extended Enterprise as the core of the wheel. It means that within this CIM concept the nucleus lies on the fundamental elements of Extended Enterprise, i.e., agility, core competence, and goal integration. This is because each element within Extended Enterprise, i.e. participating companies, will have its own method to achieve agility, will define and exercise its own core competence and will integrate its goals within Extended Enterprise framework. It should also be noticed that this may, or may not be the same with other companies within Extended Enterprise.

4.8.1. Typical Main Functions within Manufacturing Companies

Having completed investigations through distribution of questionnaire, semi-structured interview, and Case Companies, it may be suggested that, in general, manufacturing enterprise internal capabilities and systems may be broken down into five main functions:

1. Engineering
2. Plant operations
3. Production planning and control
4. Distribution and customer support
5. Business Operation

Bearing in mind that each manufacturing enterprise may have different functions, the following is the discussion of each of typical main functions, based on the Case Company A:

Engineering. This function is divided into several activities such as: design, new product development, engineering change and release control, manufacturing engineering and industrial engineering. Engineering's role is to act as a source of ideas for the Company. The design team needs to carry out design for new products and subsequently model and analyse as necessary.

Research and development tasks may include investigating problems with existing product(s), testing new materials and new manufacturing technologies. Some work that has been carried out within the engineering function may result in a patent for the Company. This occasionally may cause a Company to become reluctant in sharing its invention with others, consequently sharing of knowledge and information at this level often fails.

However, some of the Case Companies are willing to share ideas and development projects in the interest of increased overall benefits. Usually the nature of their business is highly specialised, discrete manufacturing products, such as jig and

fixture design, tooling and moulding in the case of Case Company A. Its core capability, and hence core competence, is precision injection moulding.

Plant Operations. This function's main objective is to turn design and raw materials or inventories into saleable products. It operates and co-ordinates a wide range of activities such as incoming materials, storage and inventory, manufacturing processes, production planning and control, quality control and inspection, packing and shipping and plant service and maintenance.

Depending on company size and nature of business, this function is usually led by a Plant Manager. Integration with suppliers and/or customer in this level is possible by using Electronic Data Interchange (EDI), Distributed Numerical Control (DNC) and access to manufacturing database systems.

Production Planning and Control. This function will normally start with Master Production Scheduling (MPS), which is driven by marketing, sales, or forecasting. Output of MPS will then be sent to material planning and resources planning functions. The output of this function will be used to plan capacity requirements.

The investigation has shown that there is a tendency for larger manufacturing companies to sub-contract their products to smaller companies as well as moving extra capacity from well developed countries to less developed or even developing countries, in order to take the advantage of lower manufacturing costs.

During the case study it was observed how this partnership has been operated. The technical expertise of a top European Company and a highly regarded South East Asian Company has been brought together. This partnership, which combined the two cultures, has created the basis for a potentially strong EE.

Distribution and Customer Support. This function may have been seen as less significant than it really is. Physical distribution links between manufacturing and retailers/customers may have a great effect on competitiveness. Therefore, for many

companies distribution forms a part of CIM (Hannam, 1997). As such, this function can be integrated with suppliers and/or customers by providing a common database system to be used to monitor levels of finished goods inventory, to allocate demand, to release orders and to schedule dispatching and shipments.

Business Operations. This function manages overall company's activities and has primary responsibility for strategy formulation. For instance, there is a common need for financial information to be communicated between the Business Operation function and all other functions within the Company or EE. Business Operation function will usually also have responsibilities for billing, accounts payable and accounts receivable.

The functions within the internal capabilities and systems of an enterprise may be put together with the resources of Extended Enterprise with the needs of EE (section 4.4.1) as the hub to form an extended CIM wheel as shown in figure 4.11. It may be suggested that this wheel appears not to have the focus on the customer that one may expect. However, it may be suggested that within an Extended Enterprise every participating enterprise may see itself as customer or supplier in different circumstances.

Each of these functions should contain 5 elements of resources of EE (section 4.4.3), i.e. Technology, Organisation, People, Information and Communication, and Culture.

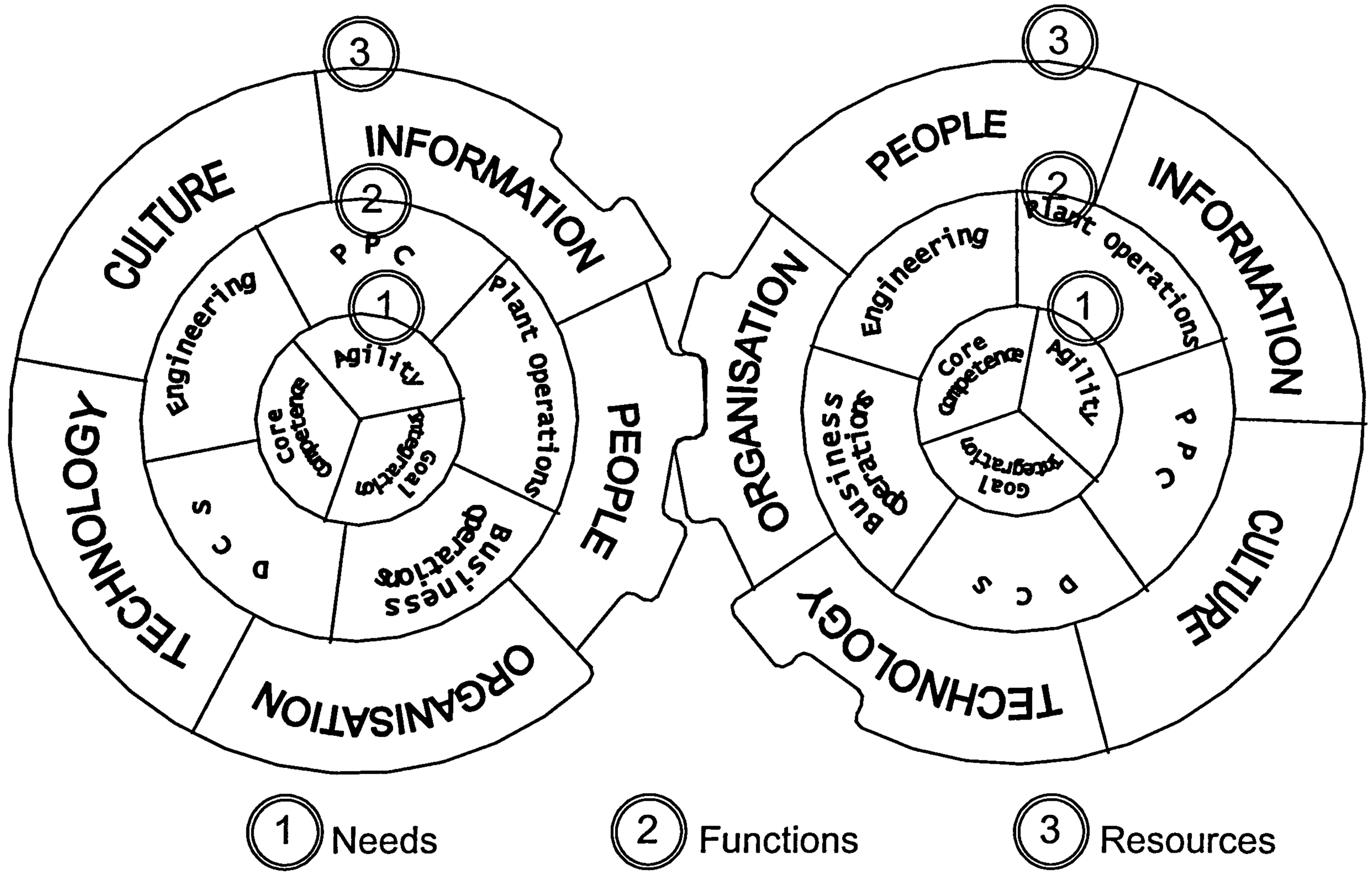

Figure 4.11: Extended CIM Wheel for Extended Enterprise

4.9. Key Enablers and Barriers to EE

In summary, based on discussion of key issues for EE drawn from Published Research (section 2.5), key indicators from Case Companies (section 3.5), it is now possible to identify a set of characteristics (enablers) for the "idealised" EE, together with a set of potential barriers to EE. Table 4.1 sets out this aspect of the reference model under the five resource headings provided in figure 4.10 the Triangle of Extended Enterprise.

The primary purpose of table 4.1 is to support structured discussion with companies wishing to assess their current status with respect to EE and who wish to identify appropriate strategies for further development towards EE.

The reference model including table 4.1 was used to analyse the status of Case Company A and was found to be of considerable value to the Company. The general approach for using the reference model, as a basis for structured development towards EE is illustrated in figure 4.12.

While for most purposes the use of the reference model as a basis for structured discussion and as a basis for strategy formulation, may be adequate, it was decided to investigate the potential for a more rigorous analytical approach.

The following chapter investigates relevant theory of Strategic Planning, with respect to its potential as a means of providing more objective assessment of the status of particular companies with respect to their progression to EE.

No.	Resources of EE	Enablers
1	Technology	• Drawing and Design Management – the use of CAD/CAM systems, design archives and configuration management. Sharing of data across functions and with partners, including common systems for CAD, use of common systems for exchange of geometric data, e.g. DXF, IGES, systems of analysis e.g. FEA, CFD, etc. • Production Management – formal approaches to inventory management and release of orders. Common scheduling structure and/or direct links to suppliers and sub-contractors. ERP approach, either large commercial system e.g. SAP or "distributed" lower cost approach in the case of SMEs. • Well established capability for Internet, Intranet and Extranet – use of email, networking and common database technology. • Project Management – the use of formal approaches and software for defining, planning and progressing projects. Common approach and software with partners. Use of standard reporting approaches, e.g. Earned Value Analysis (EVA). Use of Programme Management approach i.e. effective management of multiple project portfolios. Use of internet based approaches to project planning and communication e.g. Microsoft Project Central. • Technology transfer – the share of technical data and/or information amongst partners through exchange of staff, education and training, job swap or on the job training. • Joint R&D – the sharing of equipment or facilities, joint publications or joint patents. • Shared product development.
2	Organisation	• Project Oriented – a dynamic portfolio of projects between partners. Evidence of an agreed set of top level objectives for EE, used as a basis for a Programme Management approach. • Rationalisation and distribution of capacity across EE. • Identification, rationalisation and deployment of core competencies. • Shared resources – exchange of staff and deployment of a common resource pool. • Shared marketing strategies – joint marketing intelligent data and information. • Shared strategic planning – leading to sharing/rationalisation of goals. • Shared customer focus. • Joint investment.

3	People	• Trusting relationships. • Openness – open minded and good interpersonal relationship. • Shared aspirations (visions). • Goal oriented and project oriented. • Good team players with well developed understanding and expertise of IT. • Flexible in outlook. • Prepared to share risk.
4	Information & Communication	• Development and deployment of IT e.g. Electronic Data Interchange (EDI), Extranet, Intranet and Internet. • Evidence of shared information across the whole range of partners and functions in EE, for example shared marketing intelligence, shared supplier/sub-contractor lists, shared product information, shared planning information. • Extensive common access to shared databases.
5	Culture	• Effective and open communication. • Risk and rewards quantification and sharing with partners. • Inclusive approach to partners and potential partners. • Culture of openness and freedom of information between partners. • Ethos centred on the long-term well-being - the individual member being directly related to the long-term well-being of EE. • Multi-cultural business orientation rather than "nationalistic" view. • Increased employee involvement in decision-making.

Table 4.1: Key Enablers for the Idealised EE

No	Resources of EE	Barriers
1	Technology	• Individual Research and Development activity. • Jealous of expertise and technology.
2	Organisation	• External relationships solely based on "traditional" cost structure. • Retention of all or most competencies. • Lack of co-operation from key partners. • Strong hierarchical approach to organisation/management.
3	People	• Difficulty in developing trust to external organisation. • Introvert. • Poor personal and technical communication skills.
4	Information & Communication	• Lack of competence and confidence in IT.
5	Culture	• Capacity preservation. • Lack of support from the top management. • Strongly nationalistic. • Pursuant of local objectives.

Table 4.2: Key Barriers for the Idealised EE

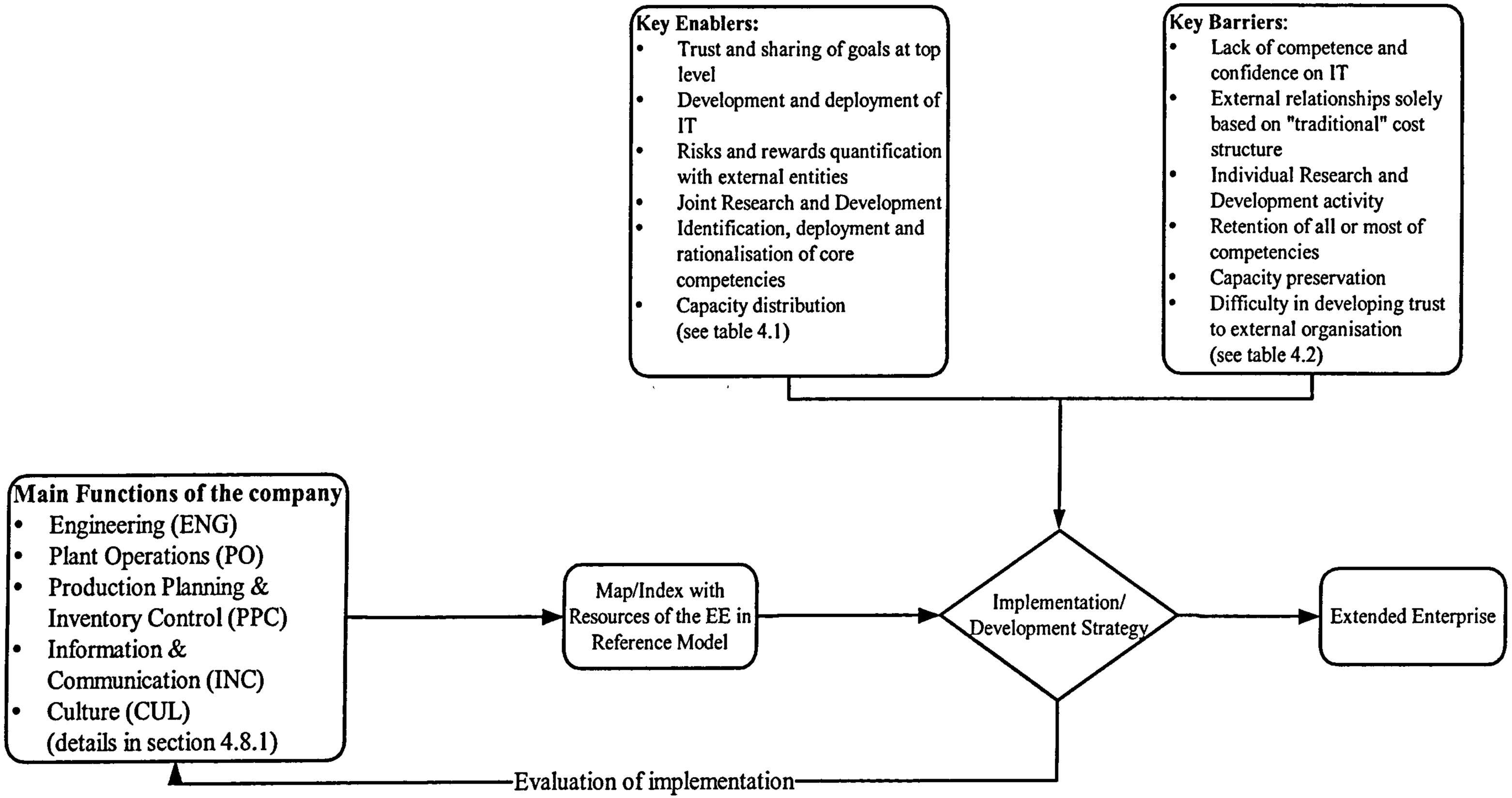

Figure 4.12: Extended Enterprise Strategic Planning Model

CHAPTER FIVE

Extended Enterprise Strategic Planning Framework

5.1. Introduction

Saaty and Kearns (1985) stated that Strategic Planning is a process of learning and growth. They go on to say that strategic planning is the process of projecting the likely or logical future, by means of a composite scenario and of idealising desired futures.

Extended Enterprise Strategic Planning should examine an enterprise current situation and determine how it may progress towards EE. This may be effected by considering defined functions of the enterprise and indexing them against the "resources" of the reference model.

The proposed approach begins by identifying what are perceived to be the main "functions" of the enterprise. These functions may then be indexed against the "resources" of Extended Enterprise on the basis of perceived potential for the resource to provide progress towards EE.

Information to support this process i.e. a ranking process is provided by the key decision-makers in each of the functions. The means by which this structure ranking of the potential of each of the resources may be achieved is set out in section 5.2.

The objective of the approach is to provide a structured basis for combining effectively the views of key decision-makers in functional areas. The intention is to provide a direction for the strategy formulation process, which must follow.

5.2. Analytical Hierarchy Process (AHP)

Srisoepardani (1996) compares 3 Group Decision-Making Methods, i.e., Bayesian Analysis, Multi Analysis Utility (Value) Theory (MAUT/MAVT), and Analytical Hierarchy Process (AHP). She aggregates those 3 methods against 16 criteria intensities and their weights using both qualitative and quantitative approaches. This results in AHP having the highest index in terms of fairness, applicability, validity and truthfulness. Therefore, this technique is appropriate to be adopted for EE Strategic Planning.

The Analytic Hierarchy Process (AHP) was developed the in the early 1970's by Thomas Saaty. The AHP includes procedures and judgements to select priorities among available alternatives and subsequently comes out with solutions.

The AHP may be summarised as follows (Saaty and Kearns, 1985),

1. Structure the hierarchy from the top (the objectives from a managerial viewpoint), through the intermediate levels (criteria on which subsequent levels depend), through the lowest level (which usually is a list of the alternatives).

2. Construct a set of pairwise comparison matrices for each of the lower levels. It will be also one matrix for each element in the level immediately above.

3. There are n (n-1)/2 judgements required to develop each matrix in step 2. Note that reciprocals are automatically assigned in each pairwise comparison.

   Having made all the pairwise comparisons and entered the data consistency is determined using estimated Eigenvalue (λmax). The consistency index is tested using the departure of λmax from the n compared with corresponding average values for random entries yielding the Consistency Ratio (CR).

4. Step 2, 3, and 4 are performed for all levels in the hierarchy.

5. Hierarchical synthesis is now used to weight the eigenvectors by the weights of the criteria and the sum is taken over all weighted eigenvector entries corresponding to those in the next lower level of the hierarchy.

6. Multiplying each consistency index by the priority of the corresponding criterion and adding them together find the consistency of the entire hierarchy. The result is then divided by the same type of expression using the random consistency index corresponding to the dimensions of each matrix weighted by the priorities as before.

Case Company A has been used to provide an exemplar of the approach. It is chosen due to the Company's availability of comprehensive data and information as well as the full support from its senior managers including the CEO for this research.

Senior management in Case Company A, nominated 5 "decision-makers", which representing each of five main functions, to take part. The decision-makers represented: Engineering, Plant Operations, Production Planning & Inventory Control, Distribution & Customer Support and Business Operation as the Company's main functions.

5.3. Extended Enterprise Strategic Planning Process

EE Strategic Planning, as has been stated in the research objective, is meant to support the assessment of current operations of a manufacturing organisation with respect to the operation of Extended Enterprise and provides direction for development and improvement.

EE Strategic Planning framework mainly consists of three phases:

Phase 1: Evaluate current organisation operations

This phase is to evaluate current organisation operations with respect to the enterprise's main functions, i.e. Engineering, Plant Operations, Production Planning & Inventory Control, Distributions & Customer Support, and Business Operation.

Phase 2: Arrange organisation functions against EE key resources

Arranging these functions against the five main resources of EE, i.e. Technology, Organisation, People, Information & Communication, and Culture on the hierarchical structure.

Phase 3: Determine the most appropriate direction in which to develop strategy for progression to EE

The extent to which the current Company's situation maps with the "indicators" and "drivers" of EE may be regarded as an "index" of development towards EE. Phase 1 of EE Strategic Planning for the Case Company A has been carried out in section 3.4 and 4.8.1.

Next is to arrange each component within the hierarchy structure using AHP approach. Each function is mapped against each resource of EE as illustrated in figure 5.1.

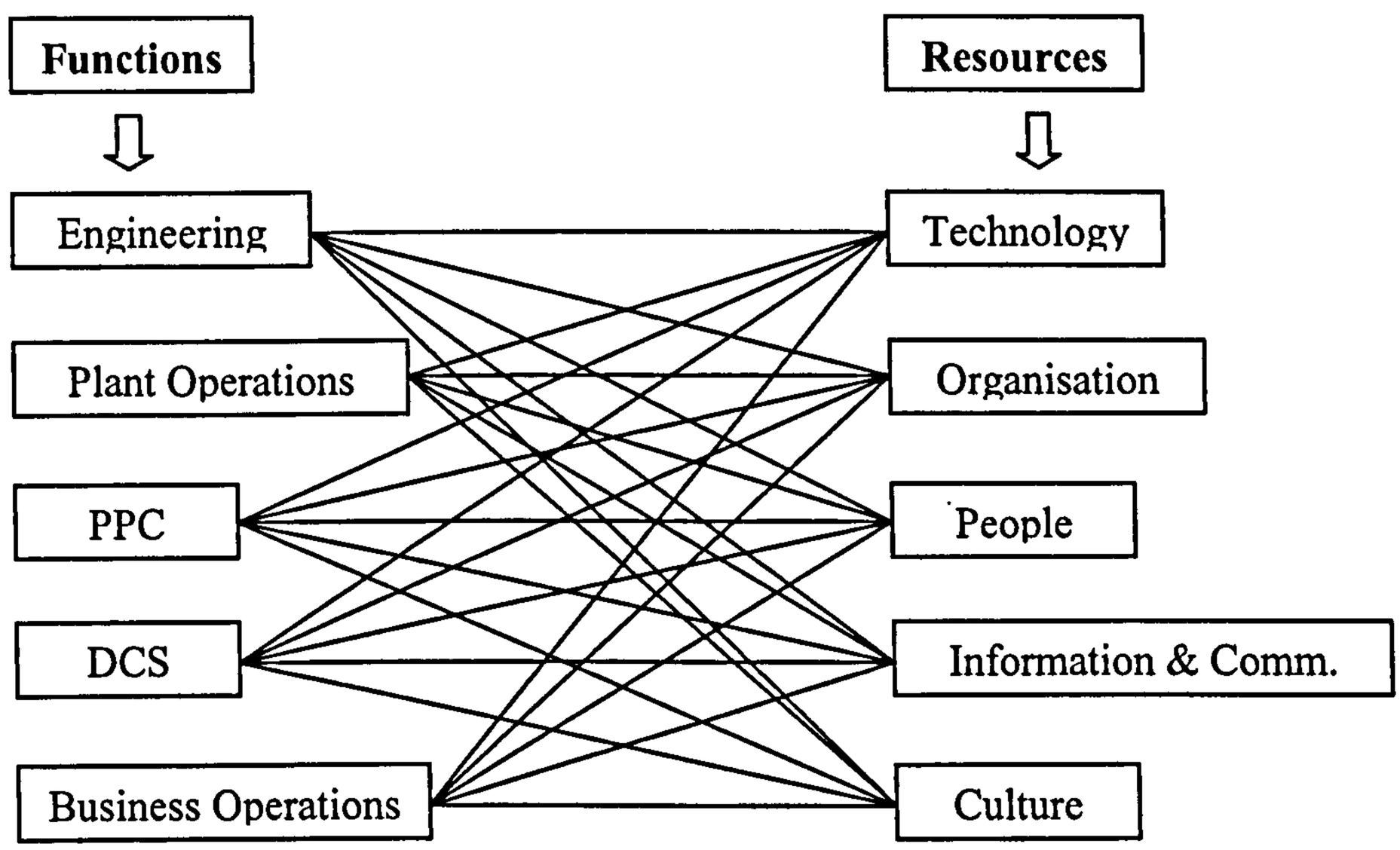

Figure 5.1: The mapping of functions with resources

Next they are arranged in a hierarchical structure as shown in figure 5.2.

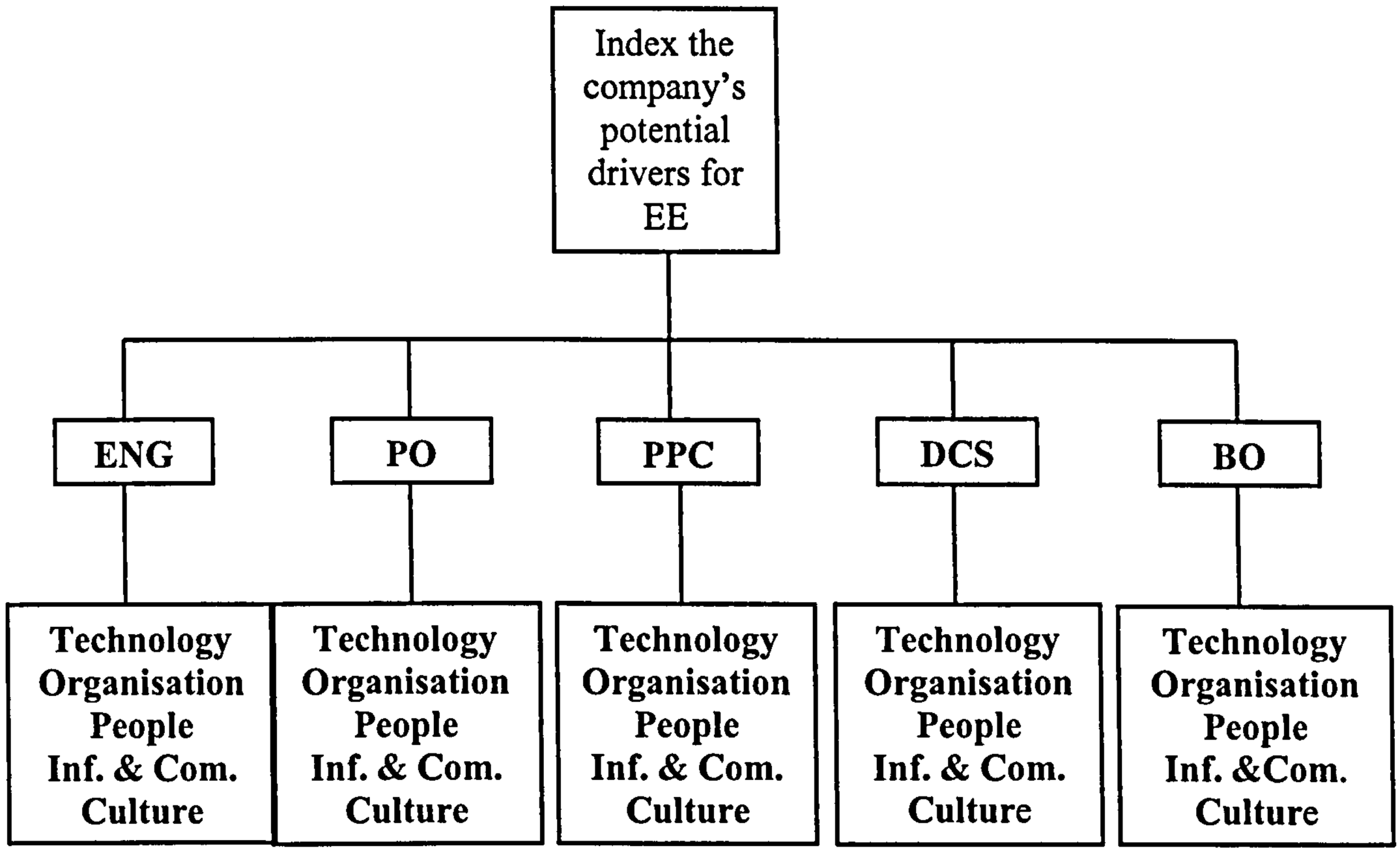

Figure 5.2: The Hierarchical Structure of Case Company A

Note:

- Engineering (ENG)
- Plant Operations (PO)
- Production Planning & Inventory Control (PPC)
- Distribution & Customer Support (DCS)
- Business Operation (BO)

Subsequently, each of the decision-makers is now to make pairwise comparisons using the scale of absolute values of 1-9 (as shown in table 5.1) for each of functions.

Absolute value	Definition	Explanation
1	Equal importance	
3	Moderate importance of one over another	
5	Essential or strong importance	
7	Demonstrated importance or very strong importance	
9	Extreme importance	
2, 4, 6, 8	Intermediate values between the two adjacent judgements	This is the case when compromise is needed
Reciprocals	Reciprocals for inverse comparisons	When an activity is valued at say 5, then the second activity has the reciprocal value of 1/5.

Table 5.1: Comparison Scale

Next is an indexing process carried out by the top level of the enterprise hierarchy, e.g. CEO/Board with respect to the relative potential of the various functions. Here the respondents i.e. decision-makers within Case Company A are asked to pairwise each of the functions to get their indexes of importance. The aim of this indexing is to obtain the decision-makers opinions with regards to the main functions of the Company with respect to the resources of EE.

Each of their pairwise comparison judgements is then arranged in the matrix form as shown in table 5.2 and table 5.3.

	ENG	PO	PPC	DCS	BO
ENG	1	2/1	3/1	2/1	1/2
PO	1/2	1	2/1	3/1	1/3
PPC	1/3	1/2	1	1/2	1/8
DCS	1/2	1/3	2/1	1	1/4
BO	2/1	3/1	8/1	4/1	1

Table 5.2: Relative comparisons of main functions in fractions

Converting the fractions into decimals (to four decimal places) will give a matrix with elements x_{in} as follows:

	ENG	PO	PPC	DCS	BO
ENG	1.0000	2.0000	3.0000	2.0000	0.5000
PO	0.5000	1.0000	2.0000	3.0000	0.3333
PPC	0.3333	0.5000	1.0000	0.5000	0.1250
DCS	0.5000	0.3333	2.0000	1.0000	0.2500
BO	2.0000	3.0000	8.0000	4.0000	1.0000

Table 5.3: Relative comparisons of main functions (in decimals)

The inconsistency of this pairwise comparison table may be calculated manually by firstly finding the priority vectors (v) as follows:

- Estimate the eigenvector components from each row n by using the following equation:

  $\sqrt[n]{(x_{i1} \times x_{i2} \times ... \times x_{in}}$ Where n is the size of the matrix.

- Add each of estimated eigenvector downwards and normalise.

Then add the multiplication results of each priority vectors (v) with each element of the matrix (x_{in}), which will yield a value denoted by λmax. Consistency Index may then be calculated using the following formula:

- $CI = \frac{\max - n}{n-1}$ Where n is, again, the size of the matrix.
- $CR = \frac{CI}{Random\ Consistency}$ Random Consistency for size 5 matrix is 1.12 (Table 5.4).

Size of matrix	1	2	3	4	5	6	7	8	9	10
Random Consistency	0	0	0.58	0.90	1.12	1.24	1.32	1.41	1.45	1.49

Table 5.4: Matrix Random Consistency

The above calculation gives Inconsistency ratio (CR) of 0.0231 (2.31%) for the relative comparison of main functions illustrated in table 5.3.

Thomas Saaty (Saaty, 1990) demonstrated mathematically that the Eigenvector solution is the best approach to get a ranking of priorities (index) from a pairwise matrix.

The followings are the steps to solve for Eigenvector:

1. The pairwise matrix is successively squared each time.
2. The row sums are then calculated and normalised.
3. The calculation is stopped when the difference between these sums in two consecutive calculations is smaller than a prescribed value.
4. The highest index resulted by the computed Eigenvector is taken as the most important criterion.

These are the steps to calculate for the Eigenvector manually:

Step1: Square the matrix:

$$\begin{bmatrix} 1.0000 & 2.0000 & 3.0000 & 2.0000 & 0.5000 \\ 0.5000 & 1.0000 & 2.0000 & 3.0000 & 0.3333 \\ 0.3333 & 0.5000 & 1.0000 & 0.5000 & 0.1250 \\ 0.5000 & 0.3333 & 2.0000 & 1.0000 & 0.2500 \\ 2.0000 & 3.0000 & 8.0000 & 4.0000 & 1.0000 \end{bmatrix}$$

X

$$\begin{bmatrix} 1.0000 & 2.0000 & 3.0000 & 2.0000 & 0.5000 \\ 0.5000 & 1.0000 & 2.0000 & 3.0000 & 0.3333 \\ 0.3333 & 0.5000 & 1.0000 & 0.5000 & 0.1250 \\ 0.5000 & 0.3333 & 2.0000 & 1.0000 & 0.2500 \\ 2.0000 & 3.0000 & 8.0000 & 4.0000 & 1.0000 \end{bmatrix}$$

The result is:

$$\begin{bmatrix} 5.0000 & 7.6667 & 18.0000 & 13.5000 & 2.5417 \\ 3.8333 & 5.0000 & 14.1666 & 9.3333 & 1.9167 \\ 1.4167 & 2.2083 & 5.0000 & 3.6667 & 0.7083 \\ 2.3333 & 3.4167 & 8.1667 & 5.0000 & 1.1111 \\ 10.1667 & 15.3334 & 36.0001 & 25.0001 & 5.0000 \end{bmatrix}$$

Step 2: Compute to find the first Eigenvector (to four decimal places) by summing up the rows.

$$\begin{bmatrix} 46.7083 \\ 34.2499 \\ 13.0000 \\ 20.0278 \\ 91.5002 \end{bmatrix} \text{Normalised to get the first Eigenvector} \Rightarrow \begin{bmatrix} 0.2273 \\ 0.1667 \\ 0.0633 \\ 0.0975 \\ 0.4453 \end{bmatrix}$$

Step 3: Re-iterate steps 1 and 2 until the Eigenvector does not change from the previous iteration (again to four decimal places)

Repeat step 1: square the matrix

$$\begin{bmatrix} 5.0000 & 7.6667 & 18.0000 & 13.5000 & 2.5417 \\ 3.8333 & 5.0000 & 14.1666 & 9.3333 & 1.9167 \\ 1.4167 & 2.2083 & 5.0000 & 3.6667 & 0.7083 \\ 2.3333 & 3.4167 & 8.1667 & 5.0000 & 1.1111 \\ 10.1667 & 15.3334 & 36.0001 & 25.0001 & 5.0000 \end{bmatrix}$$

X

$$\begin{bmatrix} 5.0000 & 7.6667 & 18.0000 & 13.5000 & 2.5417 \\ 3.8333 & 5.0000 & 14.1666 & 9.3333 & 1.9167 \\ 1.4167 & 2.2083 & 5.0000 & 3.6667 & 0.7083 \\ 2.3333 & 3.4167 & 8.1667 & 5.0000 & 1.1111 \\ 10.1667 & 15.3334 & 36.0001 & 25.0001 & 5.0000 \end{bmatrix}$$

The result is:

$$\begin{bmatrix} 137.2291 & 201.5143 & 490.3610 & 336.0973 & 67.8610 \\ 99.6665 & 146.9514 & 355.8883 & 244.9441 & 49.3146 \\ 38.3889 & 56.3334 & 137.2291 & 94.1111 & 18.9907 \\ 59.2963 & 87.1275 & 212.0695 & 146.1112 & 29.3750 \\ 269.7784 & 396.1961 & 964.3909 & 662.3628 & 133.5070 \end{bmatrix}$$

Again repeat step 2: compute the Eigenvector (to four decimal places) by summing up the rows.

$$\begin{bmatrix} 1233.0627 \\ 896.7650 \\ 345.0533 \\ 533.9795 \\ 2426.2351 \end{bmatrix} \text{Normalised to get Eigenvector} \Rightarrow \begin{bmatrix} 0.2269 \\ 0.1650 \\ 0.0635 \\ 0.0982 \\ 0.4464 \end{bmatrix}$$

Step 4: Compute the difference of the previous computed Eigenvector with the last one.

$$\begin{bmatrix} 0.2269 \\ 0.1650 \\ 0.0635 \\ 0.0982 \\ 0.4464 \end{bmatrix} - \begin{bmatrix} 0.2273 \\ 0.1667 \\ 0.0633 \\ 0.0975 \\ 0.4453 \end{bmatrix} = \begin{bmatrix} -0.0004 \\ -0.0017 \\ 0.0002 \\ 0.0007 \\ 0.0011 \end{bmatrix}$$

If the result in four decimal places is equal or less than zero (not significant) then the calculation may be stopped otherwise re-iterate.

Hence, the indexes (relative ranking) of the main functions are:

BO - 0.4464 → the first (most) important function

ENG - 0.2269 → the second important function

PO - 0.1650 → the third important function

DCS - 0.0982 → the fourth important function

PPC - 0.0635 → the fifth (least) important function

The computed Eigenvector gives indexes (the relative ranking) of the main functions of Case Company A as illustrated in figure 5.3.

It may be worth noting that the decision-makers within the Case Company A have regarded Business Operation (BO) currently as the most important function with regards to its move towards EE operations.

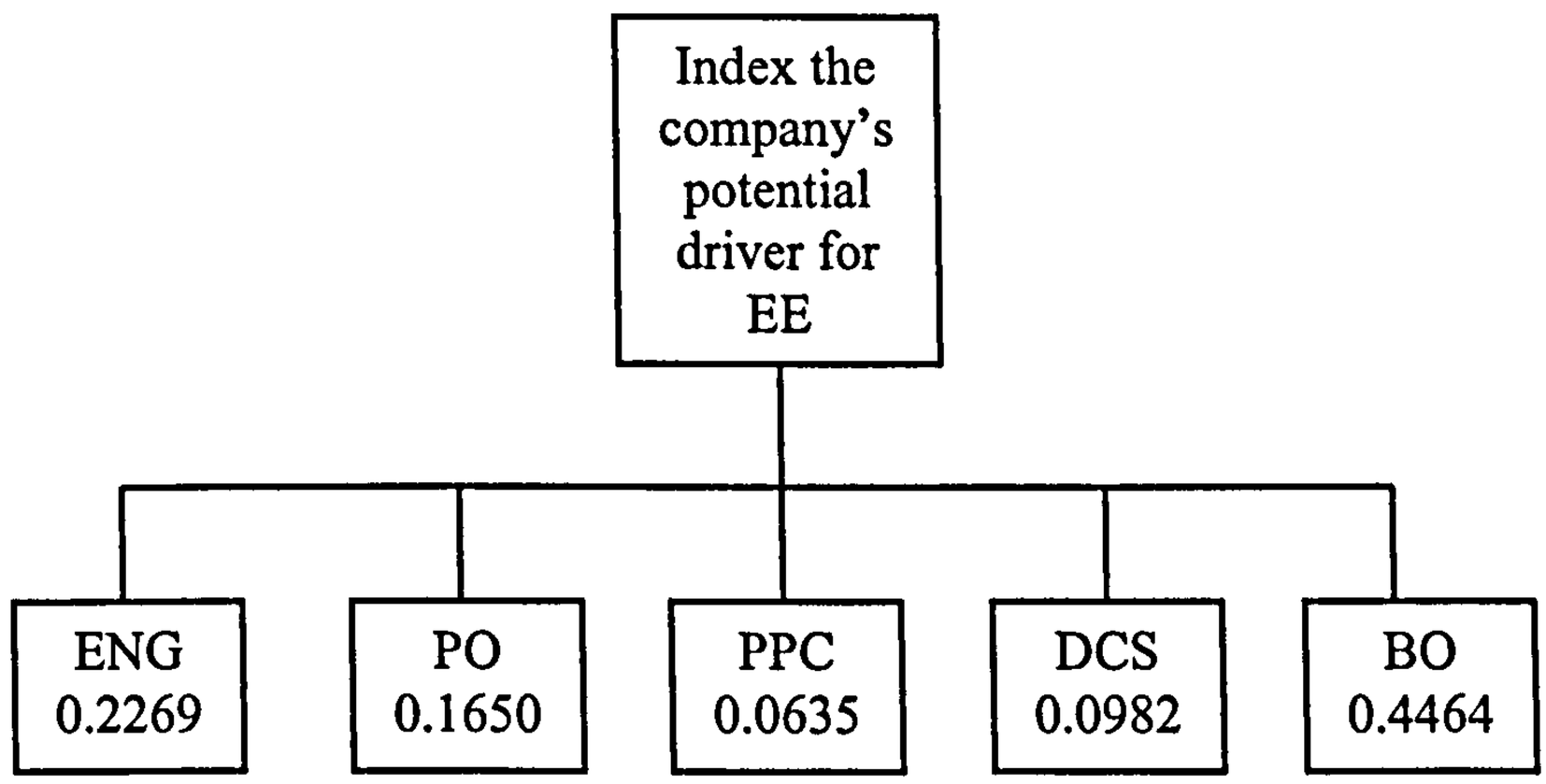

Figure 5.3: The indexes of main functions for Case Company A

Given the relative comparisons of resources of EE below then a similar procedure should be done to find the indexes for resources of EE for each of the main functions of Case Company A.

Engineering (ENG)

	TEC	ORG	PEO	INC	CUL
TEC	1	2/1	3/1	2/1	3/1
ORG	1/2	1	2/1	3/1	3/1
PEO	1/3	1/2	1	2/1	4/1
INC	1/2	1/3	1/2	1	5/1
CUL	1/3	1/3	1/4	1/5	1

Inconsistency ratio: 0.0901 (9.01%)

Table 5.5: Relative comparisons of resources of EE in fractions

Again, these are the steps to calculate for the Eigenvector manually:

Step1: Square the matrix:

$$\begin{bmatrix} 1.0000 & 2.0000 & 3.0000 & 2.0000 & 3.0000 \\ 0.5000 & 1.0000 & 2.0000 & 3.0000 & 3.0000 \\ 0.3333 & 0.5000 & 1.0000 & 2.0000 & 4.0000 \\ 0.5000 & 0.3333 & 0.5000 & 1.0000 & 5.0000 \\ 0.3333 & 0.3333 & 0.2500 & 0.2000 & 1.0000 \end{bmatrix}$$

X

$$\begin{bmatrix} 1.0000 & 2.0000 & 3.0000 & 2.0000 & 3.0000 \\ 0.5000 & 1.0000 & 2.0000 & 3.0000 & 3.0000 \\ 0.3333 & 0.5000 & 1.0000 & 2.0000 & 4.0000 \\ 0.5000 & 0.3333 & 0.5000 & 1.0000 & 5.0000 \\ 0.3333 & 0.3333 & 0.2500 & 0.2000 & 1.0000 \end{bmatrix}$$

The result is

$$\begin{bmatrix} 5.0000 & 7.1667 & 11.7500 & 16.6000 & 34.0000 \\ 4.1667 & 5.0000 & 7.7500 & 11.6000 & 30.5000 \\ 3.2500 & 3.6667 & 5.0000 & 6.9667 & 20.5000 \\ 3.0000 & 3.5833 & 4.4167 & 5.0000 & 14.5000 \\ 1.0167 & 1.5250 & 2.2667 & 2.5667 & 5.0000 \end{bmatrix}$$

Step 2: Compute to find the first Eigenvector (to four decimal places) by summing up the rows.

$$\begin{bmatrix} 74.5167 \\ 59.0167 \\ 39.3833 \\ 30.5000 \\ 12.3750 \end{bmatrix} \text{Normalised to get the first Eigenvector} \Rightarrow \begin{bmatrix} 0.3453 \\ 0.2735 \\ 0.1825 \\ 0.1413 \\ 0.0573 \end{bmatrix}$$

Step 3: Re-iterate steps 1 and 2 until the Eigenvector does not change from the previous re-iteration (again to four decimal places).

Repeat step 1: square the matrix

$$\begin{bmatrix} 5.0000 & 7.1667 & 11.7500 & 16.6000 & 34.0000 \\ 4.1667 & 5.0000 & 7.7500 & 11.6000 & 30.5000 \\ 3.2500 & 3.6667 & 5.0000 & 6.9667 & 20.5000 \\ 3.0000 & 3.5833 & 4.4167 & 5.0000 & 14.5000 \\ 1.0167 & 1.5250 & 2.2667 & 2.5667 & 5.0000 \end{bmatrix}$$

X

$$\begin{bmatrix} 5.0000 & 7.1667 & 11.7500 & 16.6000 & 34.0000 \\ 4.1667 & 5.0000 & 7.7500 & 11.6000 & 30.5000 \\ 3.2500 & 3.6667 & 5.0000 & 6.9667 & 20.5000 \\ 3.0000 & 3.5833 & 4.4167 & 5.0000 & 14.5000 \\ 1.0167 & 1.5250 & 2.2667 & 2.5667 & 5.0000 \end{bmatrix}$$

The result is:

$$\begin{bmatrix} 177.4153 & 226.0833 & 323.4250 & 418.2583 & 1040.1583 \\ 132.6625 & 171.3569 & 246.8250 & 317.4417 & 773.7417 \\ 89.5194 & 116.1847 & 168.8403 & 218.7667 & 528.3500 \\ 74.0264 & 95.6403 & 140.0542 & 184.3528 & 446.8333 \\ 31.5875 & 40.0444 & 57.7674 & 76.0244 & 189.7625 \end{bmatrix}$$

Again repeat step 2: compute the Eigenvector (to four decimal places) by summing up the rows.

$$\begin{bmatrix} 2185.3403 \\ 1642.0278 \\ 1121.6611 \\ 940.9069 \\ 395.1863 \end{bmatrix} \text{Normalised to get Eigenvector} \Rightarrow \begin{bmatrix} 0.3477 \\ 0.2613 \\ 0.1785 \\ 0.1497 \\ 0.0629 \end{bmatrix}$$

Step 4: Compute the difference of the previous computed Eigenvector with the last one.

$$\begin{bmatrix} 0.3453 \\ 0.2735 \\ 0.1825 \\ 0.1413 \\ 0.0573 \end{bmatrix} - \begin{bmatrix} 0.3477 \\ 0.2613 \\ 0.1785 \\ 0.1497 \\ 0.0629 \end{bmatrix} = \begin{bmatrix} -0.0024 \\ 0.0122 \\ 0.0040 \\ -0.0084 \\ -0.0055 \end{bmatrix}$$

The Eigenvector value is still significant, so do once more iteration.

Repeat from step 1 squaring the matrix:

$$\begin{bmatrix} 177.4153 & 226.0833 & 323.4250 & 418.2583 & 1040.1583 \\ 132.6625 & 171.3569 & 246.8250 & 317.4417 & 773.7417 \\ 89.5194 & 116.1847 & 168.8403 & 218.7667 & 528.3500 \\ 74.0264 & 95.6403 & 140.0542 & 184.3528 & 446.8333 \\ 31.5875 & 40.0444 & 57.7674 & 76.0244 & 189.7625 \end{bmatrix}$$

X

$$\begin{bmatrix} 177.4153 & 226.0833 & 323.4250 & 418.2583 & 1040.1583 \\ 132.6625 & 171.3569 & 246.8250 & 317.4417 & 773.7417 \\ 89.5194 & 116.1847 & 168.8403 & 218.7667 & 528.3500 \\ 74.0264 & 95.6403 & 140.0542 & 184.3528 & 446.8333 \\ 31.5875 & 40.0444 & 57.7674 & 76.0244 & 189.7625 \end{bmatrix}$$

That will give:

$$\begin{bmatrix} 154239.9427 & 198083.5361 & 286456.7462 & 372912.8427 & 914626.4845 \\ 116304.2570 & 149377.5410 & 216031.5908 & 281224.6461 & 689656.6725 \\ 79293.7226 & 101844.9612 & 147297.7282 & 191758.5082 & 470231.3733 \\ 66120.1802 & 84921.6564 & 122826.9380 & 159917.7490 & 392164.8288 \\ 27709.7413 & 35584.9186 & 51463.2336 & 67002.9895 & 164341.5041 \end{bmatrix}$$

Repeating step 2 by summing up the rows will give:

$$\begin{bmatrix} 1926319.5523 \\ 1452594.7074 \\ 990426.2935 \\ 825951.3525 \\ 346102.3871 \end{bmatrix} \text{Normalised to get Eigenvector} \Rightarrow \begin{bmatrix} 0.3476 \\ 0.2621 \\ 0.1787 \\ 0.1491 \\ 0.0625 \end{bmatrix}$$

Step 3: Re-iterating one more time gives the same result as above, hence the indexes (relative ranking) of the resources of EE are:

Technology (TEC)	- 0.3476	
Organisation (ORG)	- 0.2621	
People (PEO)	- 0.1787	
Information & Comm. (INC)	- 0.1491	
Culture (CUL)	- 0.0625	ifth (least) important resource

Repeating these procedures for the rest of the resources will give the following:

Plant Operations (PO)

	TEC	ORG	PEO	INC	CUL
TEC	1	3/1	1/2	2/1	3/1
ORG	1/3	1	1/2	3/1	3/1
PEO	2/1	2/1	1	3/1	7/1
INC	1/2	1/3	1/3	1	5/1
CUL	1/3	1/3	1/7	1/5	1

Inconsistency ratio: 0.0752 (7.52%)

Table 5.6: Relative comparisons of resources of EE in fractions

This will give the indexes:

People (PEO) - 0.3720

Technology (TEC) - 0.2615

Organisation (ORG) - 0.1850

Information & Comm. (INC) - 0.1299

Culture (CUL) - 0.0516

Production Planning & Inventory Control (PPC)

	TEC	ORG	PEO	INC	CUL
TEC	1	4/1	5/1	1/2	3/1
ORG	1/4	1	1/4	1/8	1/3
PEO	1/5	4/1	1	1/5	3/1
INC	2/1	8/1	5/1	1	7/1
CUL	1/3	3/1	1/3	1/7	1

Inconsistency ratio: 0.0671 (6.71%)

Table 5.7: Relative comparisons of resources of EE in fractions

This will give the indexes:

Information & Comm.(INC) - 0.4707

Technology (TEC) - 0.2863

People (PEO) - 0.1249

Culture (CUL) - 0.0756

Organisation (ORG) - 0.0426

Distributions and Costumer Supports (DCS)

	TEC	ORG	PEO	INC	CUL
TEC	1	1/2	1/2	2/1	7/1
ORG	2/1	1	1/3	2/1	5/1
PEO	2/1	3/1	1	4/1	8/1
INC	1/2	1/2	1/4	1	8/1
CUL	1/7	1/5	1/8	1/8	1

Inconsistency ratio: 0.0682 (6.82%)

Table 5.8: Relative comparisons of resources of EE in fractions

This will give the indexes:

People (PEO)	- 0.4249	the first (most) important resource
Organisation (ORG)	- 0.2202	
Technology (TEC)	- 0.1894	
Information & Comm. (INC)	- 0.1328	
Culture (CUL)	- 0.0327	fifth (least) important resource

Business Operation (BO)

	TEC	ORG	PEO	INC	CUL
TEC	1	1/3	2/1	3/1	6/1
ORG	3/1	1	3/1	3/1	8/1
PEO	1/2	1/3	1	4/1	2/1
INC	1/3	1/3	1/4	1	5/1
CUL	1/6	1/8	1/2	1/5	1

Inconsistency ratio: 0.0864 (8.64%)

Table 5.9: Relative comparisons of resources of EE in fractions

This will give the indexes:

Organisation (ORG)	- 0.4292
Technology (TEC)	- 0.2416
People (PEO)	- 0.1751
Information & Comm. (INC)	- 0.1091
Culture (CUL)	- 0.0450

The computed Eigenvectors gives indexes (the relative ranking) of each of the main functions and potential resources for Case Company A as shown in figure 5.4.

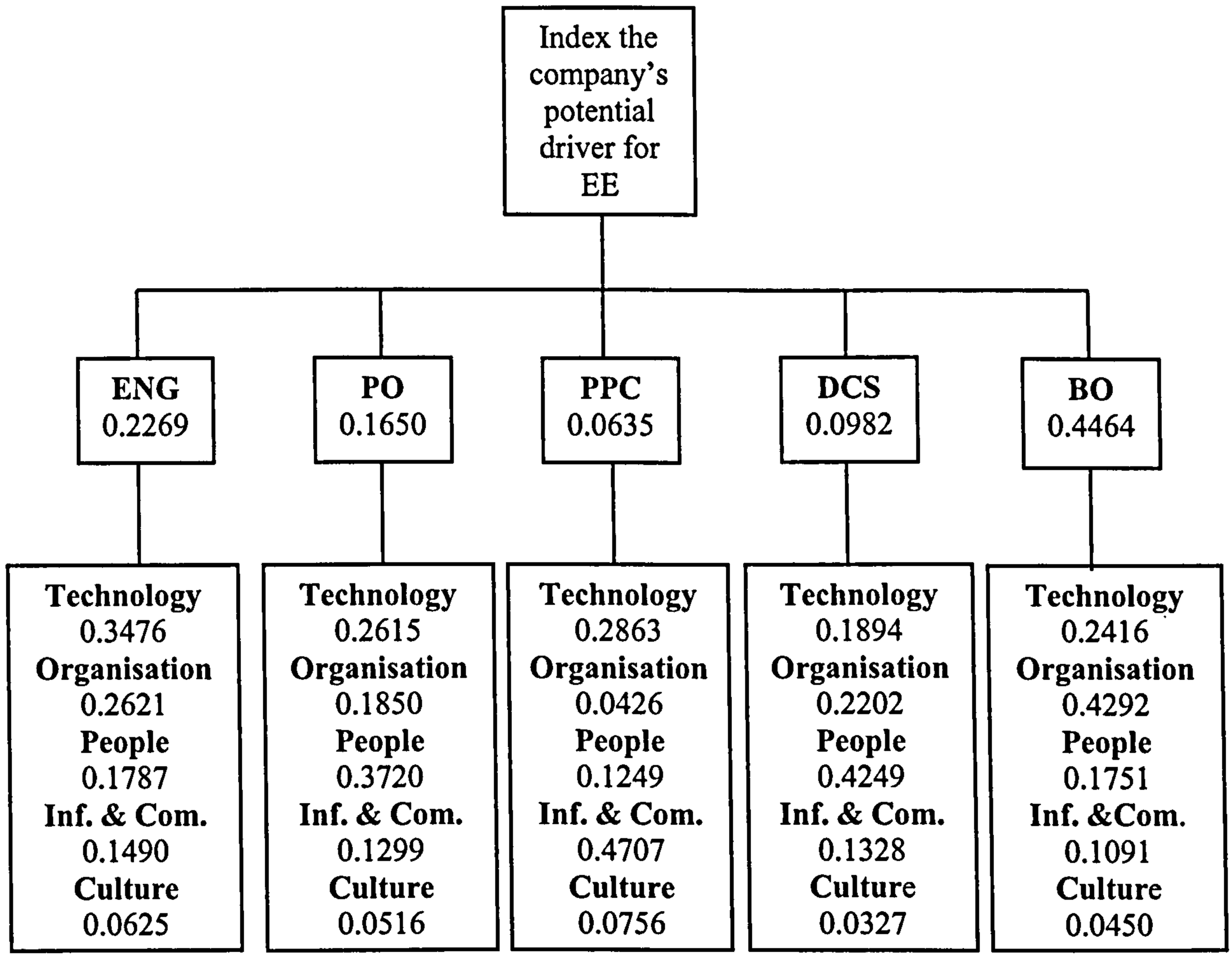

Figure 5.4: The indexes of main functions and resources for EE of Case Company A on the hierarchical structure

These indexes are based on judgments given by the respective CEO/Board and functional managers, having observed the key enablers and barriers presented in tables 4.1 and 4.2. There are two important points that may be observed from these indexes.

The first level illustrates the relative potential of each function to promote progression to EE from the view of senior management. The second level illustrates the relative potential for each of the resources to promote progression to EE, from the view of each of the key decision-makers in the functional areas.

It is now possible to consolidate the information into an overall ranking of the five resources within the Company with respect to their potential to promote progression to EE. This is obtained by multiplying matrix of resources of the Case Company A with its main functions as follows,

$$\begin{bmatrix} 0.3476 & 0.2615 & 0.2863 & 0.1894 & 0.2416 \\ 0.2621 & 0.1850 & 0.0426 & 0.2202 & 0.4292 \\ 0.1787 & 0.3720 & 0.1249 & 0.4249 & 0.1751 \\ 0.1490 & 0.1299 & 0.4707 & 0.1328 & 0.1091 \\ 0.0625 & 0.0516 & 0.0756 & 0.0327 & 0.0450 \end{bmatrix} * \begin{bmatrix} 0.2269 \\ 0.1650 \\ 0.0635 \\ 0.0982 \\ 0.4464 \end{bmatrix} = \begin{bmatrix} 0.2666 \\ 0.3059 \\ 0.2297 \\ 0.1469 \\ 0.0508 \end{bmatrix}$$

Hence, the relative ranking of each of the resources are listed as follows,

- **Organisation (ORG)** - 0.3059
- **Technology (TEC)** - 0.2666
- **People (PEO)** - 0.2297
- **Information & Communication (INC)** - 0.1469
- **Culture (CUL)** - 0.0508

This suggests strongly that the Company should emphasise on Organisation in its strategic planning towards EE. Subsequent review of the situation after a period of development may reveal different relationships between the resources and different requirements for emphasis.

However if or when all resources have equal potential, it does not mean necessarily that the ideal structure to support EE has been achieved, as there may remain considerable scope for improvement with respect to each of the resource areas.

The approach serves primarily to direct strategic effort for the Company, pointing to what the decision-makers perceived to be the most profitable direction to progress towards EE, at the time of the evaluation.

The extent, to which the resources of a particular Company have been developed with respect to what might be regarded as the "ideal" to support EE, may be represented by the use of a "radar" diagram. Figure 5.5 illustrates the situation where a Company or a partner is perceived to have achieved 50% of the progress necessary, in each of the resource areas towards the ideal EE operation.

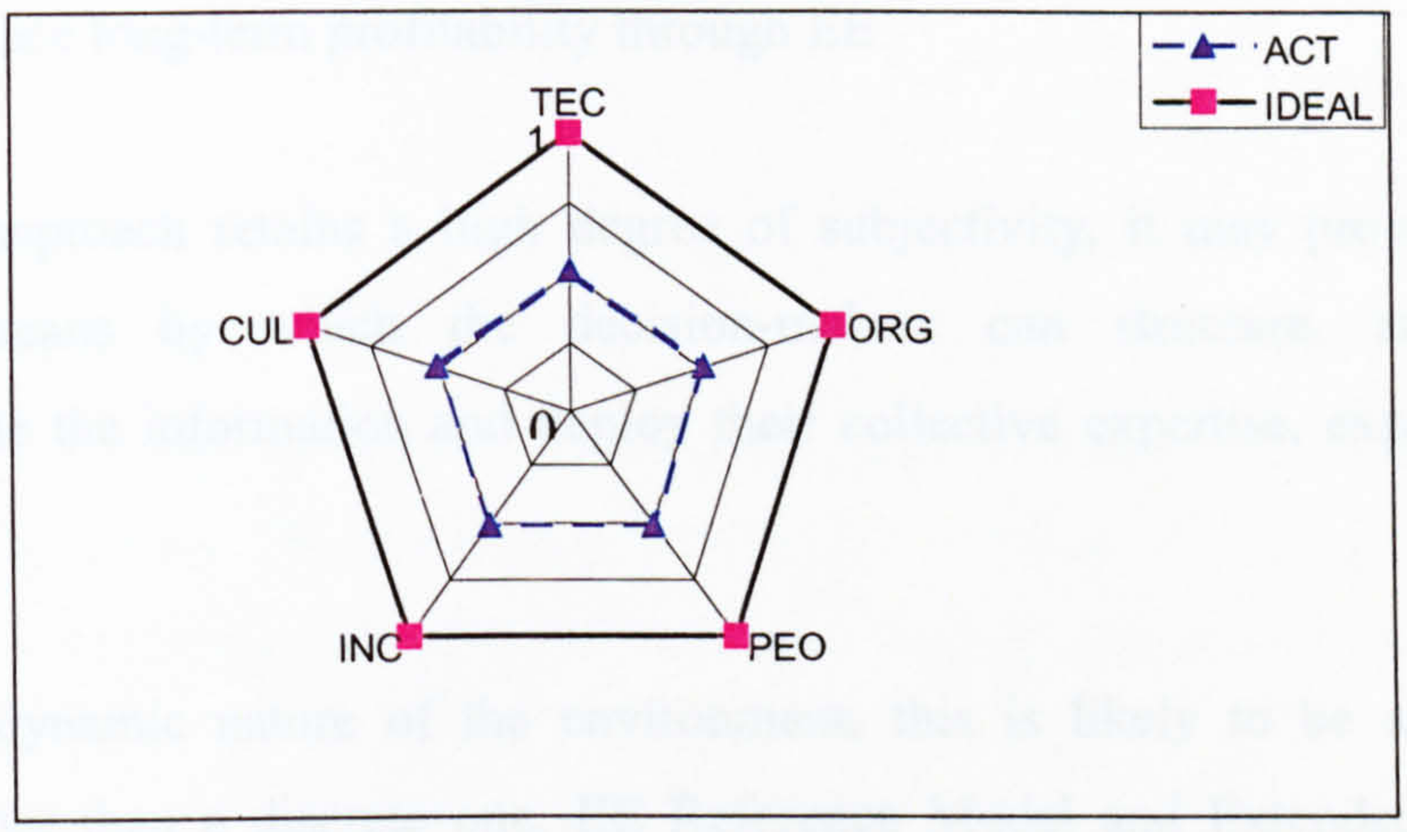

Figure 5.5: The Radar Chart of Ideal and Actual Conditions

Hence a second question may be posed to the Company being accessed. "To what extent are the reference characteristics for EE in place within the Company?" This question was posed to the decision-makers in Case Company A. The results are shown in figure 5.6.

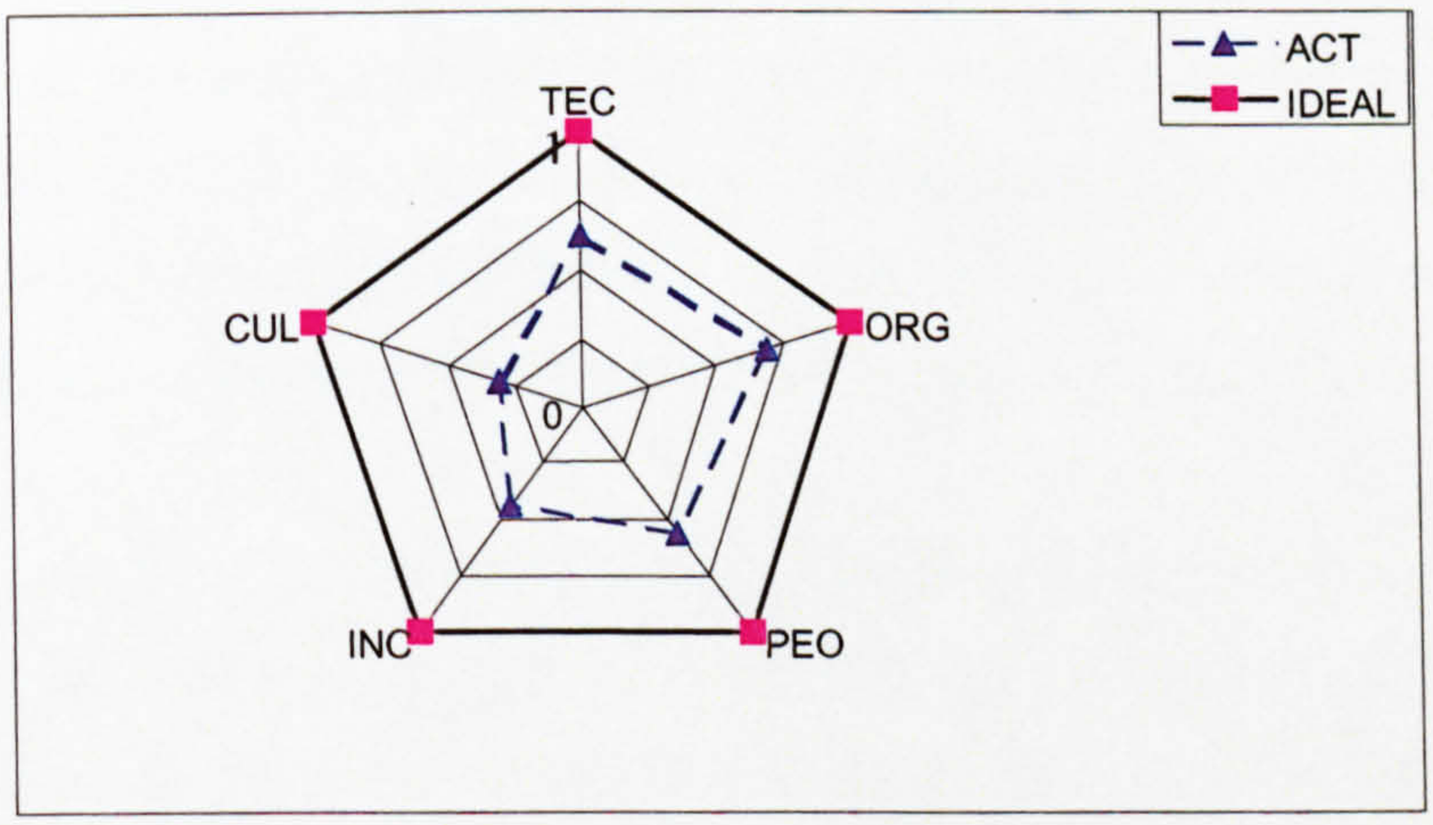

Figure 5.6: The Radar Chart of Ideal and Actual Conditions of the Resource of EE for Case Company A

Thus, formulation of strategy for development towards EE may now be supported by:

1. Consideration of current status with respect to the development of individual resources in relation to the ideal EE.

2. Identification of the resource perceived as having the greatest potential to enhance long-term profitability through EE.

While the approach retains a high degree of subjectivity, it may provide a more effective means by which the decision-makers can structure, analyse and communicate the information and deploy their collective expertise, experience and judgement.

Given the dynamic nature of the environment, this is likely to be a continuing process rather than a discrete one. EE Reference Model and Extended Enterprise Strategic Formulation Model, together with the structured approaches for decision-support presented in this Chapter, provide an effective reference and strategic planning tool for companies wishing to progress towards EE.

CHAPTER SIX

ORGANISATIONAL STRUCTURE for EXTENDED ENTERPRISE

6.1. Introduction

The provision of an appropriate organisation structure was stated as a likely pre-requisite for effective EE, in the early sections of the thesis. The development of an appropriate approach to organisation structure formed one of the initial objectives for the research.

The importance of organisation structure with respect to Case Company A identified in section 5.3 emphasises the need for an appropriate structured organisational approach for EE. It is intended to develop an appropriate organisational structure for EE and provided an exemplar application based upon Case Company A.

Organisations typically have an overcomplicated nesting of processes, with a command or control hierarchy, in which extra levels may make no distinct contribution to the work of lower levels. Church (1997) argued that they simply undermine economic quality by managerial rework or tampering. He goes on to say that one way to overcome this problem is to form an organisational structure that is process aligned and has the potential to add the maximum economic value.

It has been argued in section 2.3 that the process of achieving successful enterprise integration may include all managerial, organisational, and technological factors that enable cross-functional process integration. Then, it is also fair to say that the success of enterprise integration, amongst others, lies in creating and developing a strategically aligned organisation, based on process integration.

One of the objectives of this Chapter is to provide a structured mechanism that will assist participating organisations within EE to achieve this alignment.

It has been proposed in section 4.4.1 that within Extended Enterprise concept, a business organisation must see itself as part of the whole process, since Extended Enterprise is responsible for the whole product life cycle.

It has also been suggested that members of EE must focus on their processes (both core and non-core) in the context of the range of processes required by EE. Hence, it may be appropriate to consider a set of processes required by EE, some of which are core and some are non-core.

From this analysis a process of negotiation may lead to a particular member of EE being given responsibility for certain of EE core competencies. There will be cases where it is appropriate for a member to relinquish what they had considered a core competence, in the interest of overall effectiveness for EE.

EE reference model proposed in section 4.4 suggests that one of the main indicators for Extended Enterprise is the existence of an appropriate organisation structure to support the effective identification, rationalisation and deployment of core competencies across EE. There is little value in the members of an extended supply-chain clearing the primary, strategic hurdle of agreeing to share their goals, if they do not have the means to put that strategy into operation.

It has been suggested that integration at the strategic (goal) level requires a high level of long term trust and openness (section 4.4.2) and to be effective it must lead to rationalisation of core competencies across the members of EE (section 4.2, 4.3 and 4.4). This means individual members may be required to consider relinquishing to other members, some of the resources and process capabilities, they believe to be central to their ability to remain competitive in the market place. While resources could exist on their own, capabilities are deeply embedded in the organisational routines, practices and business activities, i.e. strategic levels (Nanda, 1996).

When these strategic issues have been resolved, there exists a need for an organisational structure, which will support the effective deployment and continued development of core competence across EE. However, before one effectively can do this, there is a need for a means to show the relationships between resources, capabilities and core competencies and then bring them together into the organisational structure of EE. This is presented in the next section.

6.2. Resources, Capabilities and Core Competencies

It has been discussed in section 4.4.1 that there are 3 key needs of EE, i.e., Core Competence, Goal Integration and Agility. Petts (1997) argues that core competence may be used as the basis for a Strategic Alliance. He suggests that it can be used to take in useful knowledge from the partners quickly which in turn can accelerate the development of the future core competence for the organisation. Therefore, Core Competence, as one of the key needs of EE, appears to be a central issue to the organisational structure of EE.

Several suggestions have been identified in the literature on how to determine a core competence: (Meyer and Utterback 1993; Prahalad 1993; Simpson 1994; Day 1994; Turner and Crawford 1994; Bruce 1998), this thesis supports the one presented earlier by Snow and Hrebiniak (1980), in which they suggest that identification of core competencies may start by evaluating the relevant business processes and activities.

Doyle (1994) defines a business process as a collection of activities that takes one or more kinds of inputs and creates an output that is of value to the customers. Furthermore, Hamel (1994) states that a firm's competencies are valuable capabilities in terms of enabling the firm to deliver a fundamental customer benefit.

However, Klein and Hiscocks (1994) argue that core competence is an outcome of integrated capabilities stretched over a number of company-wide processes. Their argument is emphasised further by Klein et al (1998) who suggest that a competence is usually a network of capabilities rather than a single activity-based process.

Therefore, in order to identify core competencies of a Company it is necessary to analyse the characteristics of its existing capabilities. Gallon et al (1995) propose a list of questions to ask to determine if a capability is a core competence:

1. Does it harmonise streams of critical technological capabilities to provide competitive advantage?
2. Does it translate into customer-perceived value?
3. Is it difficult to imitate? (Are there substantial barriers to competitors?)
4. Is it extendable to many markets? Does it provide market mobility?

Combining the approaches of Klein et al (1998) and Gallon et al (1995) leads to the following questions being posed as a test of core competence. In the case of EE these must be addressed at EE level i.e. across the network of partners.

1. Is it a significant source of competitive differentiation?
2. Does it cover a network of capabilities over a network of partners?
3. Is it difficult for your competitors to imitate?
4. Does it harmonise streams of critical technological capabilities to provide competitive advantage?
5. Does it translate into customer-perceived value?
6. Is it extendable to many markets?
7. Does it provide market mobility?

If most of the decision-makers within an organisation were able to answer yes to the majority of these questions when considering a capability or network of capabilities, then it is a good indication that they have been able to identify a core competence.

Javidan (1998) breaks down the competency hierarchy into 4 levels, i.e. resources at the bottom level, capabilities at the second level, competencies at the third level and core competencies at the top level. He argued that capabilities and resources are related to functional strategy at the departmental level, whereas core competencies

are the responsibility of top management through its corporate strategy as illustrated in figure 6.1.

This argument is very much in line with the approach adopted for EE reference model suggested in section 4.4 of this thesis, which suggests that EE concept is a top-down approach.

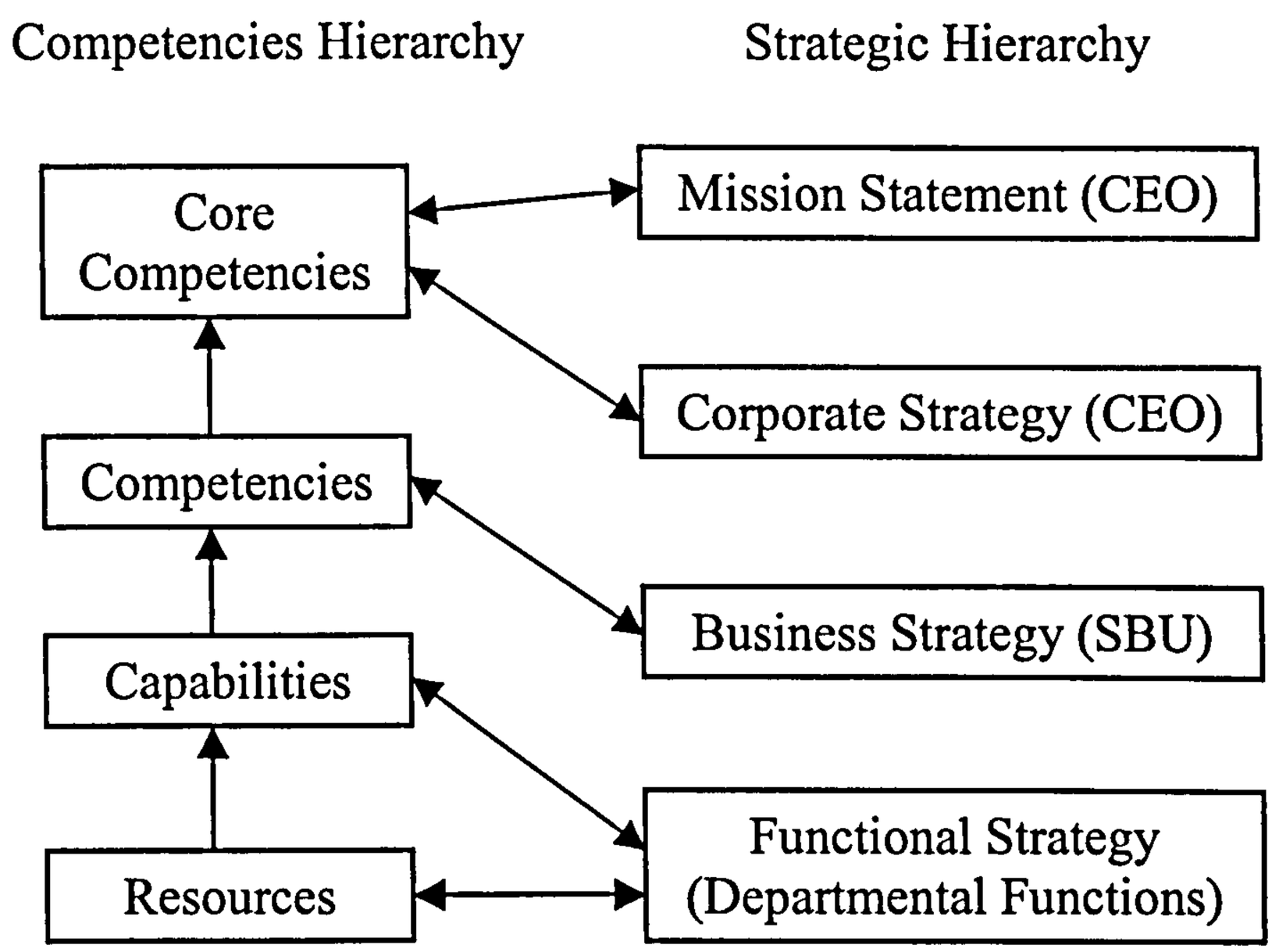

Figure 6.1: The Competencies, Capabilities and Strategic Hierarchy (after Javidan, 1998)

Resources at the bottom level of the hierarchy are the inputs to the organisation's value chain. Capabilities at the second level are the organisation's ability to exploit its resources. Javidan (1998) also argued that they are functionally based. Competencies in the third level are cross-functional integration and coordination of capabilities. The highest level in the hierarchy is core competencies, which are shared across business units and result from the integration and harmonisation of Strategic Business Units (SBUs) within an organisation.

With respect to the above argument, precision injection moulding design and manufacture is a Core Competence of the Case Company A, since on the basis of earlier analysis it satisfies most of criteria addressed by the "seven questions".

From this it may be said that in order to identify core competencies at company level it is necessary to identify the Company's existing capabilities and associated resources. This approach may be applied in the context of EE i.e. by looking at members' resources and capabilities and mapping them against the main resources of EE.

Looking at the capabilities of Case Company A, which are related to functional departments, i.e. Engineering, Plant Operations, Production Planning & Inventory Control, Distribution & Customer Support Systems and Business Operation, it may be worth noting that each of these functions comprises a large number of processes. Therefore, to itemise each of these processes could lead to an exhaustive list.

It logically follows that the mapping exercise should not be conducted at every individual process level of a function. This argument is also supported by Hafeez et al (2002) for two main reasons. Firstly, it would lead to a useless exercise of generating a long list of specific processes. Secondly, such specific and disaggregated processes are usually uninformative.

Then, it may be suggested that amongst those processes, only a few critical (core) processes with respect to the goal of EE should be selected.

Changchien and Shen (2001) propose the Core Process Analysis Matrix (CPAM) approach, which may help managers involved within a strategic alliance to identify critical processes by relating the processes involved with the goals. Hence, since EE may also be considered as a form of strategic alliance, then CPAM may be considered appropriate to support identification of core processes. The application of CPAM will be demonstrated in the next section.

6.3. Identifying Core Processes

The business process re-engineering (BPR) literature is especially beneficial in contributing to the definition of a core process. Usually the critical or core business processes are the ones which are essential to meeting customer requirements and are re-engineered first (Hammer and Champy 1993).

The concept of the enterprise having a technological core, which it buffers from environmental disturbances, was developed by Thompson (1967) to account for the defensive behaviour in many types of organisations. This may previously be seen very strongly in the Case Company A in comparison with the other two Case Companies.

Scott (1981) reviews the multiple varieties of measures, which have been utilised to assess the technological core in terms of inputs, transformation processes and outputs. The concept of a core process, however, needs to include more than technological capabilities within EE. It needs to cover all the five resources within EE, technology, organisation, people, information and communication and culture.

As with the concept of core competencies, there are also multiple definitions given by many authors for core processes. However, few of them, if any, have actually seen it from the strategic alliance point of view. The following are some of the definitions given by previous authors on core processes, which may potentially support progress towards the operation of strategic alliance and hence, ultimately may lead to operation of EE. A definition of core processes given by Housel, Morris, and Westland (1993):

> *"A process whose activities are necessary for the enterprise to meet its strategic goals and objectives through production of its end products or services".*

Childe, Maull, and Bennett (1994) give another definition of core processes:

> *"Processes which are directly related to satisfying the requirements of the external customer".*

According to Earl (1994) core processes are:

> *"Those central to business functioning, which relate directly to external customers".*

From the last two definitions of core processes, it may be noted that core process must have a direct relation to external entities, i.e. customers. Also, core processes must affect strategic goals.

The operation of core processes is related closely to the availability of appropriate core competencies within EE. Also as stated earlier (section 4.5), one of the key enablers of EE is the existence of an appropriate structure to support rationalisation and deployment of core competencies.

Looking at the definitions given above and for the purpose of this thesis, the author defines core processes as:

> *"Processes provided by the core competencies of the enterprise participating in EE to meet its strategic goals and objectives by utilising its collective resources and capabilities".*

Core Process Analysis Matrix (CPAM)

First of all, each functions' manager involved within EE will be asked to give an index range from 1 represented by a letter W for low importance, 5 represented by a letter M for medium importance and 9 represented by a letter S for the most important relationship respectively. For instance Manufacturing process (MAN) is given an "M" index by the Engineering department (function) whereas Tool design is given "S" by the same department and so on.

Then the Criteria of Importance (CI) is also given for each of the functions with respect to the project concerned. This is represented by an index from 1 to 9 with 1 being the least important and 9 being the most important. Following this, a senior manager, usually the manager who is coordinating the entire project, is asked to

submit his/her evaluation (CEU) for each functions involved with respect to the current project, again from 1 to 9.

Finally, partners are also given an opportunity to give their evaluation (CEP) from 1 to 9 in similar way to the senior management.
CPAM suggests 5 steps for identifying Core Processes:

Step 1: Calculate the Relative Evaluation Value (RV):

$$RV = \frac{\text{Current Evaluation for Us (CEU)}}{\text{Current Average Evaluation for Partners (CEP)}}$$

Step 2: Calculate the Adjusted Criteria Importance (ACI):

$$ACI = \frac{\text{Criteria Importance (CI)}}{RV}$$

Step 3: Calculate the Raw Importance Index (RI):

$$RI = \sum_{\text{column}} ACI \text{ X } CO$$

CO is the correlation between Core Process and Resources.

Step 4: Calculate the Importance Index (I) for Core Processes:

$$I = \frac{RI}{\sum_{\text{row}} RI}$$

Step 5: Put the result in the tabular form: This approach is illustrated by means of an exemplar based on Case Company A in the following section.

6.4. Process Breakdown Structure

Given that one of the criteria for EE is that it is project oriented (section 4.4.2), it may be appropriate to consider, as a starting point, an existing approach to project orientated organisation structure using project/programme management approach. Harrison (1993) promoted the idea of Work Breakdown Structure (WBS) within project/programme management field as a means of providing the structure to the identification of work packages in projects. Over recent years the use of WBS has had increasing application and is used in many integrated planning systems for top level planning, e.g. BAAN. An exemplar application scenario of WBS with Case Company A is presented next.

The Exemplar Application Scenario of WBS

Case Company A has won the bid to produce RF/data connectors for a new model of mobile phone for a mobile phone manufacturer (MPC). Case Company A as a reputable precision plastic moulding company within a niche market in electronic connectors felt that it had not enough capabilities, resources and competencies to undertake the contract alone. Therefore, the senior management were enthusiastic to find a means to structure their resources and capabilities so that they could manage the contract with the best possible result. Subsequently they agreed to take part in the research using this particular project as a case study.

First of all, the Work Breakdown Structure (WBS) of the project is presented. Figure 6.2 illustrates the Work Breakdown Structure (WBS) of the project i.e. the fabrication of RF/Data connectors for a new model of mobile phone. The structure is broken down into 4 levels with the top level identified as Level 0.

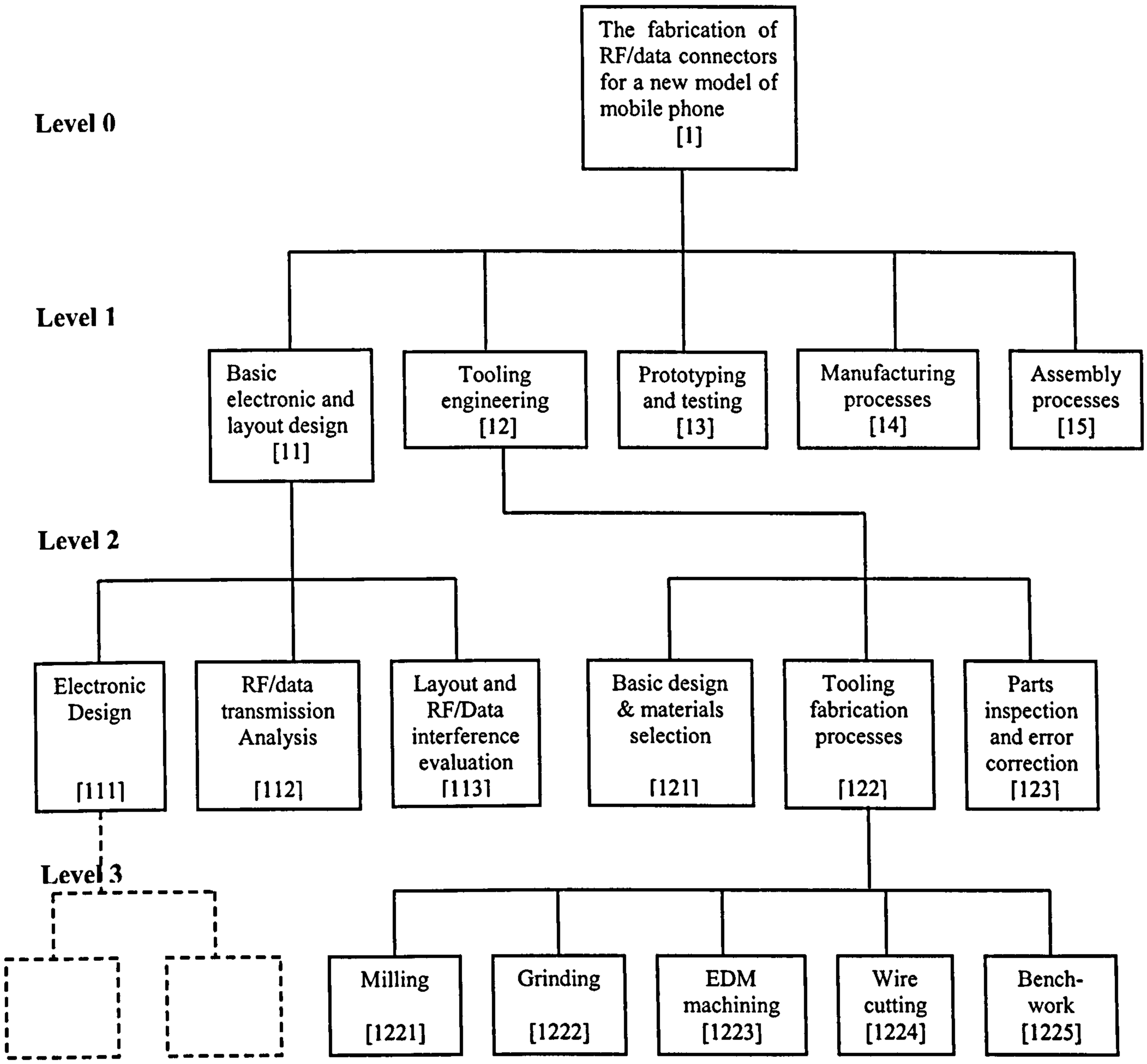

Figure 6.2: An exemplar application of a Simplified Work Breakdown Structure (WBS) based on Case Company A

Next is the construction of the Organisation Breakdown Structure (OBS) for Case Company A. The objective is to identify and introduce "Strategic Business Unit (SBU)" or functional entities within the organisation, in order to deliver capabilities and assign resources. Figure 6.3 illustrates the OBS of Case Company A.

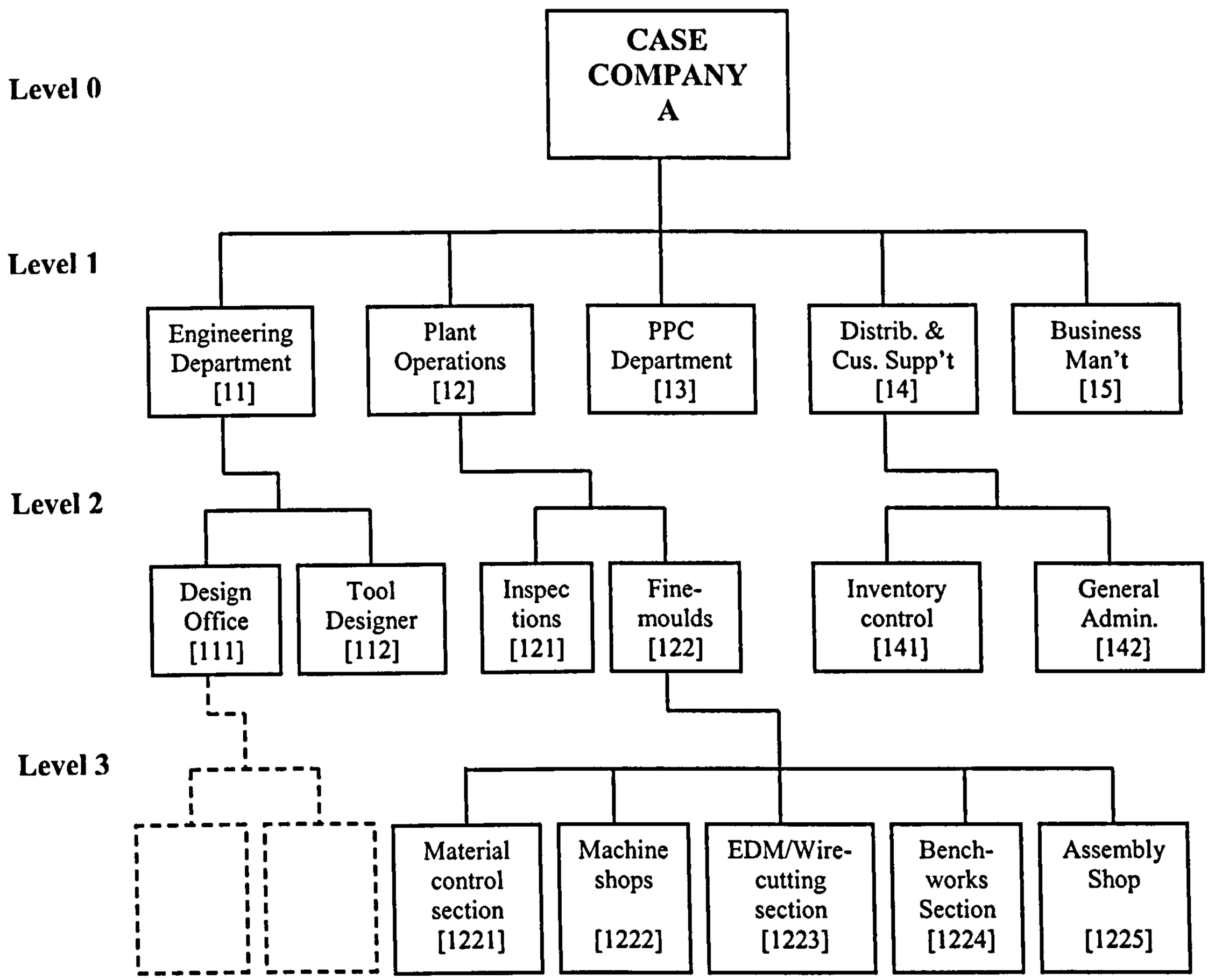

Figure 6.3: An exemplar application of a Simplified Organisation Breakdown Structure (OBS) based on Case Company A

After this, the WBS may be combined with the OBS by arranging them in a matrix form. The integration of WBS and OBS of Case Company A, as illustrated in figure 6.4, is to provide the basis for the effective identification of "work packages" in the project, together with the identification of the entity responsible for the execution of the package.

The integration of WBS and OBS provides what are termed cost accounts. It also illustrates the potential for providing codes for the various levels of work breakdown, culminating in the individual cost accounts at the work package level.

It may be worth noting that in practice the cost account itself provides capabilities and absorbs resources. Hence, it implies that the WBS/OBS may also be used to identify key capabilities with respect to the distribution of processes. Key capabilities within EE may be seen as equating to the cost account, with the entities of EE equating to elements of organisation structure.

Hence, the matrix of WBS/OBS presented in figure 6.4 may be used as the basis to capture the resources and capabilities of Case Company A, with regards to the project concerned.

It may also be noted from this diagram that there are 11 potential key capabilities needed to complete the project.

These key capabilities, which are the building blocks of the Company's, several competencies (discussed in section 6.2) may subsequently lead to the emergence of some core competencies. In turn these core competencies may either be retained within the organisation or relinquished to other partners within an EE.

Work Breakdown Structure

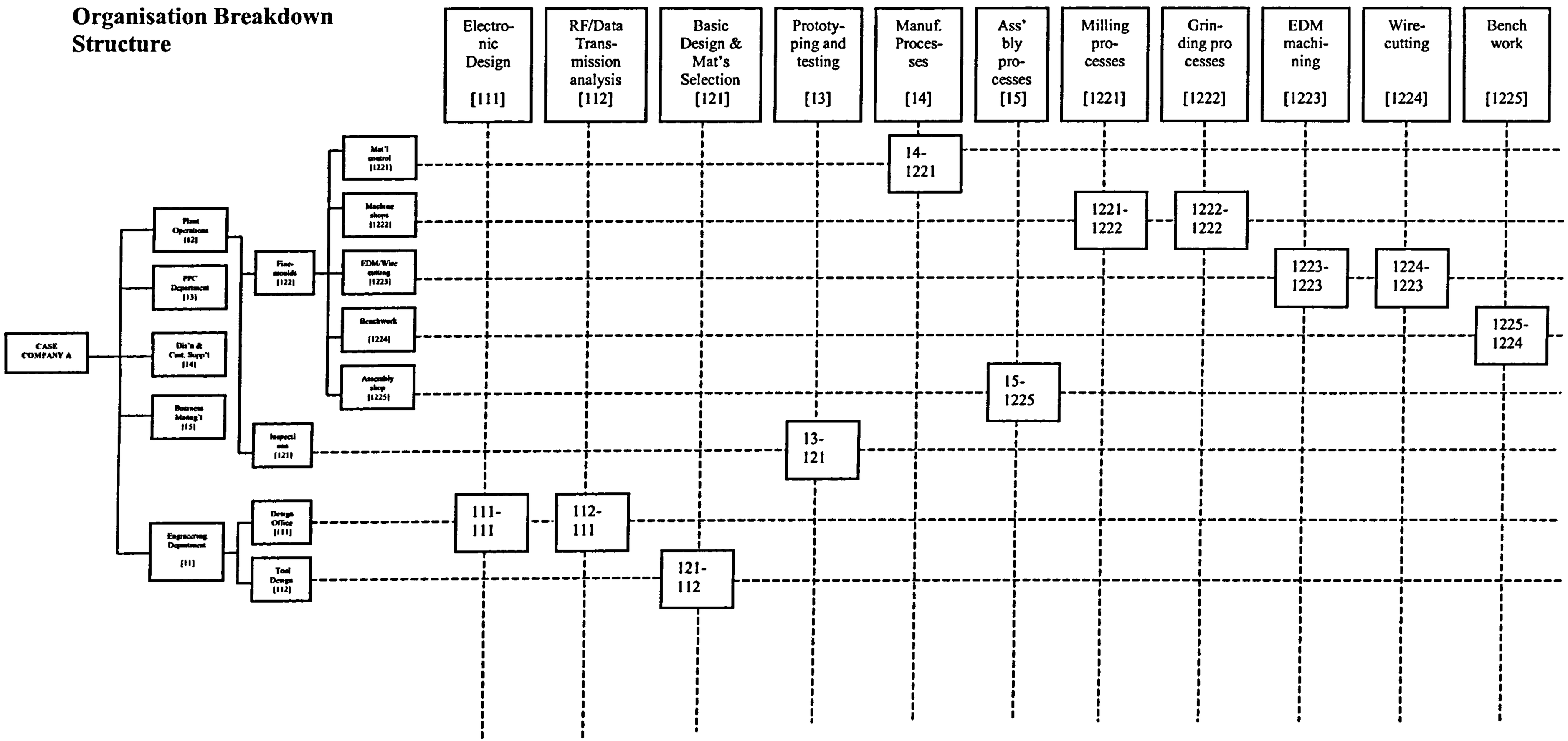

Figure 6.4: An exemplar application of WBS/OBS

Given the widespread and increasing application of WBS, OBS and the integration of WBS/OBS, it appears appropriate to consider it as a basis for a structure, which could support the effective identification, rationalisation and deployment of core competence across an EE, rather than simply across a company or an organisation.

This consideration is given after deploying the Core Process Analysis Matrix (CPAM) to identify core processes (the steps have been presented previously in section 6.3).

This structure is introduced in this thesis as **"Process Breakdown Structure"** (PBS).

The main phases of the Process Breakdown Structure are summarised as follows:

- **Phase 1**: Build the Work Breakdown Structure (WBS)
- **Phase 2**: Build the Organisation Breakdown Structure (OBS)
- **Phase 3**: Integrate the WBS and OBS to identify key capabilities
- **Phase 4**: Deploy Core Process Analysis Matrix (CPAM)
- **Phase 5**: Distribute the processes against entities responsible for each process within EE

Up to stage Phase 3 of the Process Breakdown Structure (PBS) has now been competed. Next the process may be carried on to Phase 4, that is deploying CPAM.

With reference to the fabrication of RF/data connectors manufacturing for a new model of mobile phone, the distribution matrix of processes, using CPAM as a tool, with their relative indexes is presented in table 6.1.

Within this study, each of the functional departments within the Case Company A, (i.e. Engineering, Plant Operation, Production Planning & Inventory Control, Distributions & Customer Services and Business Operation) is represented by a decision-maker.

Each of them is to score against each of the capabilities needed in order to complete the project. The scores are divided into 3 levels, Strong (S) correlation gives 9 point, Medium (M) correlation gives 5 point and Weak (W) correlation gives 1 point.

Their senior management/project manager will then assess the criteria of importance (CI) for each of the functions with respect to this project by giving an index of CI between 1 (less importance) to 9 (most importance). Next, there will also be evaluation index (1–9) both for internal capabilities of the Case Company A (CEU) given by functions' manager and its partners' Company senior manager (CEP), i.e. suppliers, sub-contractors and partners with whom the Company intends to collaborate with.

The raw importance (RI) for each of the processes may then be obtained as well as their importance index (%).

The last phase of the process is for senior management (and/or decision-makers) within the Company to decide in conjunction with discussion with partners, which processes with respect to its respective index will be carried out internally and which may be relinquished to external entities within EE. For this project the Company has decided that the Company would, nominally, wish to retain processes with an index of 10% or more.

	MAN	ASSY	MILL	GRIND	EDM	WIRE	BENC	TOOL	RFDA	LAY-OUT	PROTO	CI	CEU	CEP
ENG	M	W	M	M	M	M	M	S	W	M	W	9	8	7
PO	M	M	S	S	S	S	S	M	M	W	W	8	8	8
PPC	M	W	M	S	M	S	M	M	M	W	W	7	6	5
DCS	W	W	W	W	W	W	W	M	W	W	M	6	4	4
BO	W	W	W	W	W	W	W	W	W	W	M	5	3	3
RI	120	65	152	175	152	175	152	175	88	64	77			
I (%)	8.58	4.65	**10.88**	**12.56**	**10.88**	**12.56**	**10.88**	**12.56**	6.32	4.61	5.51			

Table 6.1: An exemplar application of CPAM with regards to Case Company A

Remarks:

ENG: Engineering
PO: Plant Operation
PPC: Production Planning & Inventory Control
DCS: Distributions & Customer Support
BO: Business Operation
CI: Criteria of Importance
CEU: Current Evaluation for us
CEP: Current Evaluation for partner

MAN: Manufacturing processes
ASSY: Assembly process
MILL: Milling process
GRIND: Grinding process
EDM: Electro Discharge Machining
WIRE: Wire cutting process
BENC: Bench work
TOOL: Tool design

RFDA: RF/Data Transmission Analysis
LAY-OUT: Layout & RF/Data Inter. Evaluation
PROTO: Prototyping & Testing
RI: Raw Importance
I: Importance (%)
S: Strong (9)
M: Medium (5)
W: Weak (1)

Figure 6.5 illustrates the whole processes as applied to the project, illustrating the processes retained and the processes passed on to partner (MPC).

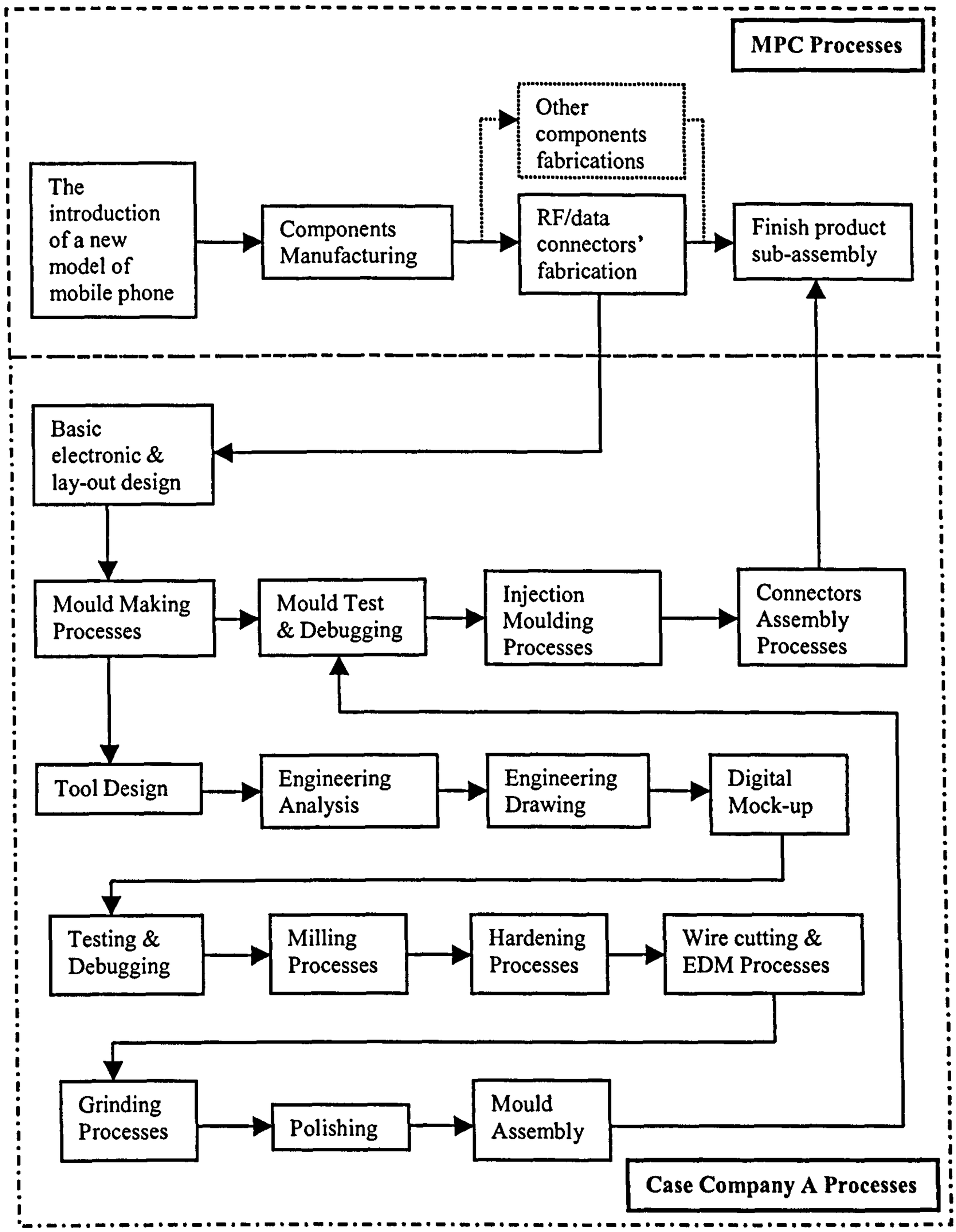

Figure 6.5: The RF/data connectors' fabrication processes for a new model of mobile phone assigned to Case Company A

Company A realised that it did not have enough resources and capabilities to do basic electronic & lay out design and to assembly the connectors. Following discussion AMP, one of its long-standing customers was invited to become a partner in this project.

Having established these processes, using the Process Breakdown Structure (PBS) approach, then a "new" distribution of processes involving AMP as a member of the proposed Extended Enterprise may be obtained. The Process Breakdown Structure for Case Company A with regard to the fabrication of RF/data connectors for a new model of mobile phone is illustrated in figure 6.6.

To develop an organisational structure to support the effective identification, rationalisation and deployment of core competencies and goal integration in Extended Enterprise is stated as one of the research objectives set up for this work. So far, the core competencies with respect to resources and capabilities have been identified and rationalised. Once identified the distribution of core competence, resources and capabilities within an EE the issue of deployment arises. The next section will address the issue of managing the deployment and development of core competencies (and hence rationalised resources and capabilities) across an EE.

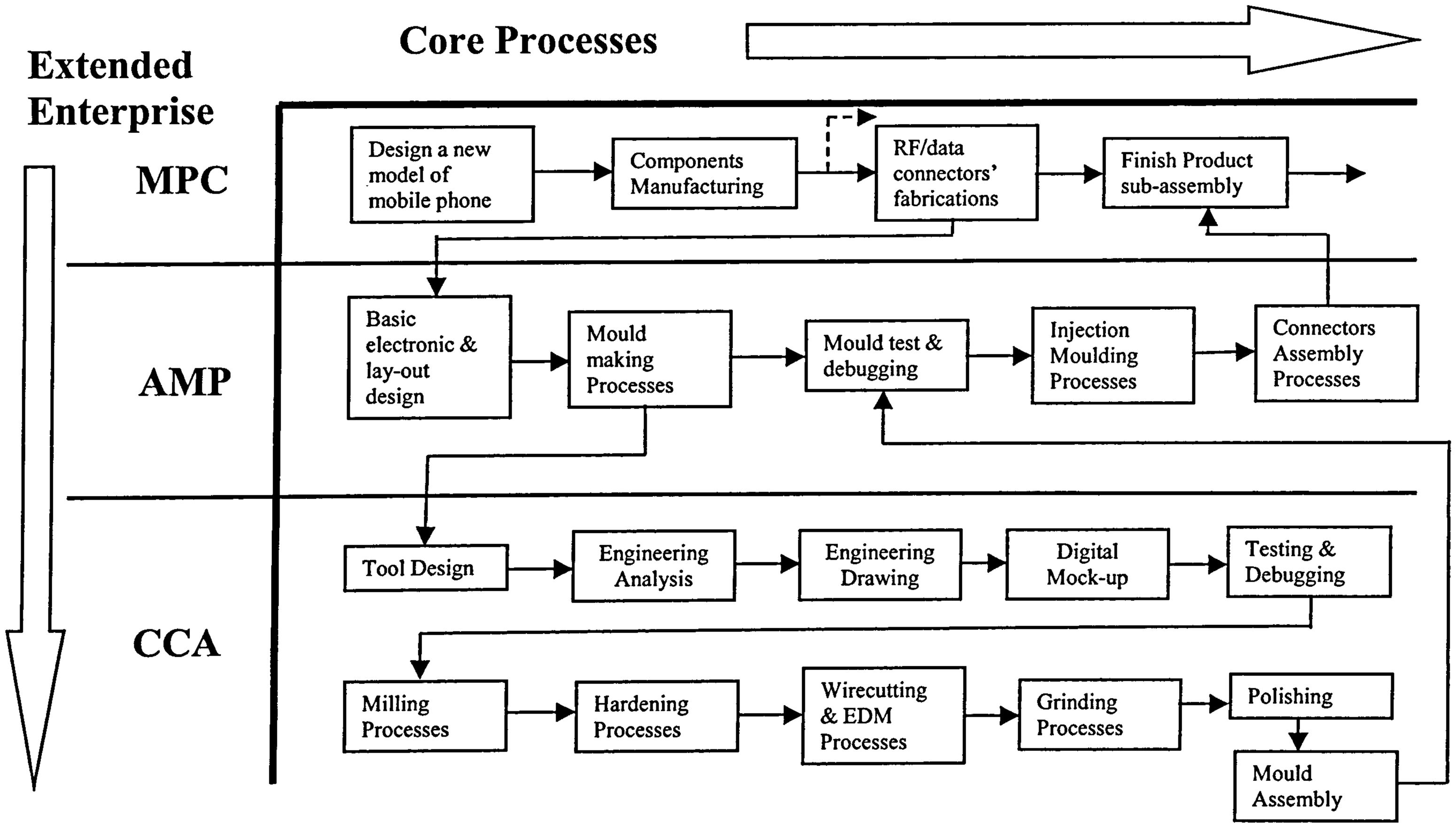

Figure 6.6: Process Breakdown Structure (PBS) for Case Company A

6.5. The Deployment of Resources and Capabilities

Project management approaches, based upon Critical Path Analysis (CPA) and Critical Path Method (CPM), have been used widely for many years. There are numerous software packages based upon these approaches and as stated previously they have been applied to provide top level planning in some ERP systems.

Commercial packages for project management provide an effective means of assigning resource requirements to particular activity and for consolidating the resource requirements for a particular project or group of projects. By this means the resource implications of particular projects and project schedules may be identified. This is of particular value in situations where resources may be constrained.

Packages provide such information in an easily understood and easily communicated format and provide a range of scheduling tools, e.g. resource levelling to help in resolving the problems.

Managing Multiple Projects

As stated, EE may be regarded as a dynamic, multi-project environment in which a portfolio of projects will exist at any point in time. The "content" of the portfolio will change on a continuous basis, with new EE projects being created and existing projects completed.

Management of multiple projects within a Company is concerned primarily with managing the resources and capabilities possessed by the Company in an effective manner, consistent with the objectives associated with the portfolio of projects. Similarly management of projects within EE has the objective of making effective use of the shared core competencies (and hence resources and capabilities) of EE, consistent with the shared objectives of EE.

The Resource Pool Concept

Companies, which operate "mature" systems for project management, have their key resources defined within a common database, which may be drawn upon by projects undertaken within the Company. Such databases are referred to as "Resource Pools". The resource pool contains information relating to the cost associated with potential resources, together with information relating to total capacity availability i.e. the ultimate constraint on resources.

It would appear sensible in the context of EE to suggest that a rationalised set of "Core Competencies" of EE are represented by resources held in a resource pool which may be drawn upon by all projects within EE. Project managers drawing upon this pool would have access to information relating to the resource profile associated with the requirements and schedules of existing projects. This would enable them to avoid overloading of shared resources if possible.

As stated earlier consolidation of projects is a useful feature of software and helps to identify resource problems associated with a combination of project schedules. In some cases the schedules required by the current portfolio of projects will be such that overload of shared resources exists and cannot be resolved by re-scheduling which is acceptable to individual project managers. When this situation arises in single companies, the decision as to which projects take priority with respect to constrained resources is taken at senior company level. In the case of EE such decisions would need to be taken at EE level.

Given the effectiveness of communication offered by systems such as Microsoft Project and Project Central (a web-based approach to publication, updating and communication of projects), a practical means of EE decision-making is feasible. Resource issues, which cannot be resolved at local project level or by communication between individual project managers, may be directed to a higher level of EE decision-making.

Use of an EE intranet may provide a concise picture of the current issues to a group of senior, business managers, drawn from partners in EE. This allows the determination of priorities for competing projects, consistent with the objective of the overall EE. It is not suggested that such decisions will be easy, but if EE is to exist, they are essential. The approach proposed helps to quantify the problem, identify options and make the whole process visible.

Elements of shared core competencies, which have long-term and sustained problems of availability, may be targeted for development. The use of approaches such as Microsoft Project Central has considerable potential for coordinating EE activity. Further developments in this area are currently underway with the imminent launch of Microsoft Project 2002 and Project Server.

The use of this integrated approach to project management and communication may also act as a communication spine for effective CIM at EE level.

CHAPTER SEVEN

CONCLUSIONS and RECOMMENDATIONS

7.1. Introduction

The aim of this research was to identify the extent to which goal integration claimed by Browne (1996) as the highest level of integration, takes place in typical manufacturing organisations and to identify models and procedures to support its promotion and implementation (section 1.1). The work was also required to take into account the increasing importance of agility, with respect to manufacturing enterprises.

7.2. Meeting of Research Objectives

The research methodology stated in section 1.4 has successfully addressed the four Research Objectives, which were put forward for this work.

Research Objective 1: To review the current state of enterprise integration and the application of CIM as a tool to progress towards higher levels of inter-enterprise integration within manufacturing industry.

This objective has been addressed by:

- A review of published research concerning enterprise integration and CIM. The review revealed a lack of detailed research into the development of reference models for EE and no published material was found relating to the development of approaches to support companies in progressing to EE although extensive material was found concerning the role of BPR, CE, CIM, MRPII, ERP and Supply-Chain Management. It was noted that for the majority of companies, the major thrust on integration was within the Company, developments with respect to ERP being concerned with attempting to integrate internal "islands of activity".

- Definitions of EE provided by researchers proposed that it would be based upon the highest level of integration (business/goal integration), would be project based and would centre upon the need to make effective and efficient use of shared core competencies (and hence resources and capabilities) across EE partners. A major element in the move towards EE was the need for greater levels of agility in the market place – EE being seen as one of the ways in which agility may be achieved. EE was seen as having potential in particular for SMEs, with their relatively limited resources and expertise. The role of CIM was discussed and it was noted that until relatively recently the emphasis had been upon the integration of "islands of technology", at company level. More recent initiatives had begun to address the issue of integration at the supply chain level.

- Results gathered from a questionnaire based survey of current practice and a series of semi-structured interviews with practitioners reinforced the need for improved agility in current and future markets. SMEs in particular were concerned at the constraints imposed by their relative lack of resources and expertise and the high cost of investing in advanced systems and technologies. The potential benefits of enhanced integration and agility through EE were seen as attractive. Companies were however unsure as to how they should progress towards EE and had reservations with respect to the practical problems and risks associated with closer collaboration. There was seen to be considerable value in the development of a reference model for EE and proposed approaches to organisational structure and management.

- Evaluation of three, collaborating Case Companies provided a specific, practical reference for the information and issues, which arose from the review of literature and the questionnaire and interviews. Examples of successful and unsuccessful attempts at integration were identified and some of the practical barriers to EE were demonstrated. In a number of areas, what might be considered as elements of EE operation were identified.

Research Objective 2: To develop an Extended Enterprise reference model which focuses upon integration at the strategic level, rather than simply at the interface of CIM sub-systems such as CAD/CAM, CAE, MRP, MRP II, etc.

On the basis of insights developed from the review of published research and the review of current practice, a reference model for EE has been developed. The model comprises a conceptual representation of EE in the form of a "Triangle" which relates to:

- The Needs of the EE: Agility, Core Competence and Goal Integration.
- The Criteria for EE: Virtual, Independent partners and Project based.
- The Resources of EE: Technology, Organisation, People, Information and Culture.

This conceptual framework for EE is used as a basis for defining a set of characteristics/enablers for EE, which are intended to form what may be regarded as a benchmark for ideal EE operation. Potential barriers to EE are also identified. Consideration is given also to the requirement for an effective CIM spine and a revised "CIM Wheel" is proposed.

Research Objective 3: To develop a method/framework to support strategic planning with respect to Extended Enterprise operation.

An EE strategic planning framework has been proposed. Essentially the basic approach involves comparison, under appropriate functional headings, of the current operations of an enterprise with those of the ideal represented by the model. This process, in conjunction with consideration of enablers and barriers, supports a structured approach to strategic planning for EE.

To investigate the potential for a more rigorous approach to strategy formulation, a strategic planning method (Analytical Hierarchy Process) was applied. The approach was used to provide a means of establishing the most promising "direction" for development to EE in a particular enterprise.

The planning approaches were applied in one of the Case Companies and were received favourably. The senior managers and CEO of the Company has shown its intention to continue their use for future planning exercises.

Research Objective 4: To develop an organisational structure for EE which provides effective identification, rationalisation and deployment of core competencies and satisfies the requirement for goal integration and agility.

An organisational approach based upon the principles of project/programme management has been proposed and developed.

The first element of the approach comprises use of the Core Process Analysis Matrix (CPAM) to identify core processes across an EE. Following rationalisation a Process Breakdown Structure (PBS) is developed and identifies the ownership of core processes (and hence capability and resources) across the EE. The PBS provides a structure to help carry out the rationalisation process. The approach has been demonstrated with respect to the operation of one of the case companies.

Structured project management techniques have also been proposed to provide effective deployment of shared core competence (resources) across the EE. The use of an EE "resource pool" together with software for management of multiple project environments and web based communication systems (e.g. Microsoft Project Central) has been suggested.

7.3. Validation of Research Hypotheses

Validation of the hypothesis has been provided by achievement of the four research objectives.

Hypothesis 1 stated that:

To be competitive in the medium to long term, manufacturing enterprises in particular SMEs, need to enhance the integration of their activities towards the concept of EE.

The review of literature and current practice revealed a need for all companies to become more agile in their response to world competition. It revealed also that researchers and practitioners viewed enhanced collaboration and integration with key partners as having the potential to provide major improvement in agility. The review identified the interest of SMEs in particular.

Hypothesis 2 stated that:

A reference model and an organisational structure for EE, which focuses on the "highest" level of integration, at the strategic level, will support enterprises in progressing to effective operation within EE.

A reference model and strategic planning approach has been developed and applied successfully in one of the Case Companies. The approach was found to be of value to the Company and further collaboration is planned.

An organisation structure based upon a Process Breakdown Structure has been developed and demonstrated, together with an approach to deployment, based upon programme management techniques and web-based communication.

7.4. Research Findings

The research findings from this work are summarised as follows:

- The purpose, needs, criteria and resources of EE have been clearly identified, as the result of extensive review, analysis and synthesis of published literature and current practice.

- It is clear that as the pre-requisite for EE is integration at the strategic level i.e. goal integration/rationalisation, one of the major issues is the requirement for long term trust, sharing of resources and sharing of risks between EE partners. Aspects such as culture, language and geographic dispersion add to the complexity of barriers, which must be overcome for EE to be achieved.

- Development of the reference model provides a framework within which organisations aspiring to operate within EE may assess their current status and develop strategies for further progression. Identification within the model of characteristics, enablers and potential barriers to EE provides practical guidance for aspiring EE partners.

- Development of an Extended Enterprise Strategic Planning model provides a generic method for organisations to assess their resources capabilities and gives direction in the move towards effective and efficient EE operations.

- As stated, the major requirement for EE is co-operation at strategic level i.e. integration/rationalisation of goals and the development of a shared long-term strategic plan. This has been shown to be compatible with the concept of a "programme management" approach to organisational structure, as discussed in section 2.5 and section 4.4.2.

- Given the will to rationalise the ownership and deployment of core competencies in an effective manner across the organisation, the need for an appropriate structure/mechanism has been identified. **"Process Breakdown Structure"**, a modification of the work breakdown and organisation breakdown approaches used in project/programme management, integrated with the Core Process Analysis Matrix (CPAM), was proposed as a potential solution to this problem.

- Application of the Process Breakdown Structure was demonstrated with respect to one of the Case Companies. The organisation saw potential in the approach and it is expected that a longer-term collaboration with respect to detailed implementation and evaluation of the approach will be possible.

- The effective deployment of a rationalised set of core competencies (capabilities and resources) in line with EE programme objectives has been addressed. An approach based upon the use of modern software for

programme management, utilising web-based communication has been suggested and described.

7.5. Contributions to Knowledge

The major contributions to knowledge of this research may be stated as follows:

- The bringing together of concepts from Supply-Chain Management, Strategic Planning and Management, Concurrent Engineering, Project/Programme Management, CIM and human resource management, into a reference model for EE.

- The development of Extended Enterprise Strategic Planning Model provides a generic method for organisations to assess their main functions with regards to the resources of EE and identifies key indicators and drivers of EE. Subsequently it gives them a means to plan the move towards effective and efficient EE operations.

- The development and illustration of an organisational structure, which has the potential to support the effective identification, rationalisation, and deployment of core competence across EE, provide contribution to knowledge at a more detailed level. This approach has been applied to the operations of one of the collaborating companies and has been identified by them as having the potential to help in the planning and implementation of expansion based upon EE.

- The research has taken the concept of EE from what was a set of relatively diverse definitions, to a clearly defined reference model. As such, it may provide a platform for further, more focused research in the area and act as a source of reference and guidance to large companies and to SMEs. This combined with the approaches developed to support strategic planning, organisation and deployment of EE, represents a significant contribution to knowledge.

7.6. Recommendations for Further Work

Given the strategic, long-term orientation of the reference model and supporting approaches, a practical validation of the whole work was not seen feasible over the time scale of the PhD.

While practical application of the model and applications was demonstrated to some extent in the exemplars, its effect on EE competitiveness and agility was not determined. It is therefore desirable that a long-term collaboration should be set-up with an appropriate company and that the effectiveness of the reference model and associated approaches in supporting progress toward EE be monitored. Changes in the overall competitiveness and agility of the company and its potential partners would also be assessed, against well-established criteria. Case company A (the SME) has expressed its interest in the long-term collaboration, in supports of expansion of its operations into South East Asia region. It would be appropriate also to form a long-term collaboration with a larger company. Case Company B, the large enterprise based in Indonesia, has expressed interest.

The work associated with this project has essentially been at the strategic level and there is more potential for further more detailed work with respect to areas such as:

- The effects of EE on the structures of large organisation
- Contractual issues between EE partners e.g. ownership of patents and responsibility for product liability.
- Human resource planning for EE
- Political aspects of EE

REFERENCES

Armistead, C. (1996), "Principles of business process management", Managing Service Quality, Volume 6, No 6, pp. 48–52.

Becker, T. and Keegan, K. (1998), "Fourth-Wave Computer Technology Will Alter Supply-Chain Management", PRTM'S Insight, Summer, pp. 21-22.

Bernus, P., Nemes, L. and Williams, T.J. (1996), "Architectures for Enterprise Integration", Chapman and Hall, London.

Bloch, M and Pigneur, Y. (1995), "Extended Enterprise: a descriptive framework, some enabling technology and case studies", Proceedings of the 2nd International Conference Network Organisation Management, pp. 307-314.

Boddy, D., MacBeth, D. and Wagner, B. (2000), "Implementing Collaboration between Organisations: an empirical study of supply chain partnering", Journal of Management Studies, Volume 37, No 7, pp. 1003-1016.

Booth, R. (1996), "Agile manufacturing", Engineering Management Journal, April, pp. 105-112.

Boykin, R. (1997), "Consortium for Advanced Manufacturing International (CAM-I)", http://www.cam-i.com.

Browne, J. and Zhang, J. (1998), "Extended and virtual enterprises – similarities and differences", International Journal of Agile Management Systems, Volume 1, No. 1, pp. 30-36.

Browne, J., Sackett, P.J. and Wortmann, J.C. (1995), "Future manufacturing systems – Towards Extended Enterprise", Computers in Industry, Volume 25, pp. 235-254.

Browne, J., Harhen, J. and Shivnan, J. (1996), "Production Management Systems: An Integrated Perspective", Addison-Wesley.

Bruce, G.M.J. (1998) "Intrafirm technical knowledge and competitive advantage: a framework for superior market driven performance", Journal of Business & Industrial Marketing, Volume 13, No. 1, pp. 70-81.

Buchanan, D. (1998), "Representing process: the contribution of a re-engineering frame", International Journal of Operations & Production Management, Volume 18, No. 12, pp. 1163-1188.

Burgess, T.F. (1994), "Making the Leap to Agility: Defining and Achieving Agile Manufacturing through Business Process Redesign and Business Network Redesign", International Journal of Operations & Production Management (IJOPM), Volume 14, No. 11, pp. 23-34.

Busby, J.S. and Fan, I.S. (1993), "Extended Manufacturing Enterprise: its nature and its needs", International Journal of Technology Management, special issue on Manufacturing Technology: Diffusion, Implementation, and Management, Volume 8, No.3/4/5, pp. 294-308.

Caskey, K.R. (1995), "Cooperative Distributed Simulation and Optimisation in Extended Enterprise", Proceedings of IFIP WG5.7 Conference, pp. 379-388.

Changchien, S.W. and Shen, H-Y (2001), "Supply chain reengineering using a core process analysis matrix and object-oriented simulation", Journal of Information & Management, Volume 39, pp. 345-358.

Childe, S.J., Maull, R.S. and Bennett, J. (1994), "Frameworks for Understanding Business Process Re-engineering", International Journal of Operations and Production Management, Volume 14, No.12, pp. 23-34.

Childe, S.J. (1998), "Extended Enterprise - a concept of co-operation", Production Planning & Control, Volume 9, No.4, pp. 320-327.

Church, M. (1997), "Enabling economic quantity and organizational responsiveness through the distribution of processes, information and values", The TQM Magazine, Volume 9, No.4, pp. 300-304.

CIM_OSA, (1996), "Open Architecture for CIM", Technical Baseline, CIMOSA Association, Böblingen, Germany.

CIM Reference Model Committee (1989), "A Reference Model for Computer Integrated Manufacturing from the Viewpoint of Industrial Automation", International Journal of Computer Integrated Manufacturing, Volume 2, No. 2, pp. 114-127

Clark, A. (1997), "Supply Chain Partnerships – Who wins?", Survey into the opportunities and threats from supply chain relationships, Logistics Consulting Services, pp. 24-26.

Cotoia, M. and Johnson, S. (2001), "Applying the axiomatic approach to business process redesign", Business Process Management Journal, Volume 7, No. 4, pp. 304-322.

Craven, B. (1998), "Lessons from retail", Manufacturing Engineer, February, pp. 40-42.

Davidow, W.H. and Malone, M.S. (1992), "The Virtual Corporation: Customisation and Instantaneous Response in Manufacturing and Service, Lessons from the World's Most Advanced Companies, Harper Collins, New York.

Davis, T. (1993), "Effective supply chain management", Sloan Management Review, Summer, pp. 35-46.

Day, G.S. (1994), "The capabilities of market-driven organizations", Journal of Marketing, Volume 58, pp. 37-52.

DeVor, R., Grave, R. and Mills, J.J. (1997), "Agile Manufacturing Research: Accomplishments and Opportunities", IIE Transactions, Volume 29, pp. 813-823.

Doumeingts, G., Vallespir, B. And Chen, D. (1995), "Methodologies for designing CIM systems: A survey", Computers in Industry, Volume 25, pp. 263-280.

Doyle, P. (1994), "Setting business objectives and measuring performance", European Management Journal, Volume 12, No. 2, pp. 123-132.

Earl, M.J. (1994), "The new and the old of business process redesign: Viewpoint", Journal of Strategic Information Systems, Volume 3, No. 1, pp. 5-22.

Elejabarrieta, J.B. (1996), "Variants management and extended enterprise models for the car maker's factory of the future", the International Federation for Information Processing (IFIP), Kluwer Academic Publishers, Massachusetts, pp. 381-390.

ESPRIT (1982), "Commission of the European Communities", COM (82) 486 Final 1/2, CEC, Brussels.

Fogarty, D.W., Blackstone jr., J.H. and Hoffmann, T.R. (1991), "Production & Inventory Management – 2nd Edition", South Wester/APICS, Cincinnati, Ohio.

Gadients, A.J., Lynwood E.H., Welsh, J. and Schwalb, A.P. (1997), "Agility through Information Sharing: Result Achieved in a Production Setting", Concurrent Engineering: Research and Applications, Volume 5, Number 2, pp. 101-111.

Gallon, M.R., Stillman, H.M. and Coates, D. (1995), "Putting Core Competency Thinking into Practice", Research-Technology Management Volume 38, No. 3, pp. 20-28.

Goldman. S.L. and Nagel, R.N. (1993), "Management, technology and agility: the emergence of a new era in manufacturing", International Journal of Technology Management, Volume 8, No 1/2, pp. 18-38.

Goranson, H.T (1995), "Agile Virtual Enterprise – Best Agile Practice Reference Base", IFIP Working Paper.

Gott, B. (1996), "Empowered Engineering for Extended Enterprise – A Managament Guide", Cambridge, UK.

Graefe, U. and Thompson, V. (1989), "A Reference Model for Production Control", International Journal of Computer Integrated Manufacturing, Volume 2, No. 2, pp. 86-93.

Guimaraes, T. and Bond, W. (1996), "Empirically assessing the impact of BPR on manufacturing firms", International Journal of Operations & Production Management, Volume 16, No. 8, pp. 5-28.

Gunn, T. (1987), "Manufacturing for Competitive Advantage: Becoming a World Class Manufacturer", Ballinger Publishing Company, Cambridge.

Hafeez, K., Zhang, Y-B and Malak, N. (2002), "Determining key capabilities of a firm using analytic hierarchy process", International Journal of Production Economics, Volume 76, pp. 39-51.

Halevi, G. (1994), "Principles of Process Planning – a logical approach", Chapman and Hall, London.

Halsall, D.N., Muhlemann, A.P. and Price, D.H.R. (1992), "Theory and Practice: The Gap in Planning For SMEs using CAPM", International Operations, Crossing Borders in Manufacturing and Service Edited by R.H. Hollier, R.J. Boaden and S.J. New, pp. 293-298.

Hamel, G. (1994), "The concept of core competence", Competence-Based Competition (Edited by: G. Hamel and A. Heene), Wiley, New York, pp. 11-33.

Hammer, M. and Champy, J. (1993), "Re-engineering the Corporation: A Manifesto for Business Revolution", Nicholas Brealey Publishing, London.

Hannam, R. (1997), "Computer Integrated Manufacturing – from concepts to realisation", Adison-Wesley.

Hardarker, G. and Ahmed, P.K. (1995), "International approaches to computer-integrated manufacturing: perspectives from Europe and Japan", European Business Review, Volume 95, No. 2, pp. 28-39.

Harrington, H.J. (1992), "Business Process Improvement", McGraw-Hill, New York.

Harrington, J. (1973), "Computer Integrated Manufacturing, Industrial Press, New York.

Harrington, L. (1995), "Taking Integration to the Next Level", Transportation and Distribution, Volume 36, No. 8, pp. 26-28.

Harrison, F.L. (1993), "Advanced Project Management – A Structured Approach", Fourth Edition, Gower Publishing Company Limited, England.

Hashemipour, M., Deniz, D.Z. and Topuz, C. (2000), "Computer-supported information requirement analysis tool based on novel methodology for analysing CIM information requirements", Journal of Robotics and Computer Integrated Manufacturing, No.16, pp. 211-224.

Housel, T.J., Morris, C.J. and Westland, C. (1993), "Business Process Reengineering at Pacific Bell", Planning Review, Volume 21, No. 3, pp. 28-33.

ISIC, (1989) http://esa.un.org/unsd/cr/family2.asp?Cl=2

Jagdev, H.S. and Browne, J. (1998),"Extended Enterprise – a context for manufacturing", Production Planning & Control, Volume 9, No.3, pp. 216-229.

Javidan, M. (1998), "Core Competence: What does it mean in Practice?" Long Range Planning, Volume 31, No. 1, pp. 60-71.

Jochem, R., Mertins, K. and Süssenguth, W. (1992), "An object oriented method for integrated enterprise modelling as a basis for enterprise coordination", The Proceedings of the First International Conference on Enterprise Integration and Modelling, MIT Press, pp. 249-258.

Karwowsky, W.G. Salvendy, R. Badham (1994), "Integrating People, Organisation, and Technology in Advanced Manufacturing: A Position Paper Based on the Joint View of Industrial Managers, Engineers, Consultants, and Researchers", The International Journal of Human Factors in Manufacturing, Volume 4, No. 1, pp. 1-19.

Kelly, P., Little, D., and Adesta, E., (1999), "Extended CIM: From Extended Supply Chain to Extended Enterprise", Proceedings of the 15th Conference on Computer-Aided Production Engineering (CAPE'99) edited by: P.G. Maropoulos and J.A. McGeough, Durham, pp. 643-648.

Kerr, S. and Ulrich, D. (1995), "Creating the Boundaryless Organization: The Radical Reconstruction of Organization Capabilities", Planning Review, Volume 23, No. 5, pp. 41-45.

Kidd, P.T. (1994), "Agile Manufacturing: Forging New Frontiers", Addison-Wesley.

Klein, J.A. and Hiscocks, P.G. (1994), "Competence-based competition: a practical toolkit", Competence-Based Competition (Edited by: G. Hamel and E. Heene), Wiley, New York, pp. 183-212.

Klein, J.A., Gee, D. and Jones, H. (1998), " Analysing clusters of skills in R&D-core compentecies, metaphors, visualisation, and the role of IT, R&D Management, Volume 28, No. 1, pp. 37-42.

Kosanke, K. (1997), "Enterprise Integration – International consensus: a Europe-USA initiative", The Proceedings of International Conference on Enterprise Integration and Modelling Technology 1997 (ICEIMT'97), Springer-Verlag, Torino Italy, pp. 64-74.

Lee, K.T and Chuah, K.B. (2001), "A SUPER methodology for business process improvement - An industrial case study in Hong Kong/China", International Journal of Operations & Production Management, Volume 21 No.5,6, pp. 687-706.

Lewis, M. W. (1998), "Iterative triangulation: a theory development process using existing cas studies", Journal of Operations Management, Volume 16, pp.455-469.

Lim, S-H, Juster, N. and de Penington, A. (1997), "Enterprise modelling and integration: a taxonomy of seven key aspects", Computer in Industry, Volume 34, pp. 339-359.

Marrioti, J.L. (1996), "The power of partnerships – the next step beyond TQM", Reengineering and Lean Production, Blackwell Publishers.

Mejabi, O.O. and Singh, N. (1997), "A Framework for enterprise-wide integration", International Journal of Computer Integrated Manufacturing, Volume 10, No. 1-4, pp. 212-220.

Myer, M.H. and Utterback, J.M. (1993), "The product family and the dynamics of core capability", Sloan Management Review, pp. 29-47.

Miles, R.E. and Snow, C.C. (1992), "Causes of failure in network organizations", California Management Review, Volume 34, No.4, pp. 53-72.

Miller, J.G., Rosenthal, S.R., and Vollman, T.E. (1986), "Taking Stock of CIM", Manufacturing Roundtable Research Report Series.

Muller, R, (1990), "Effective Supply Chain Management", Sloan Management Review, pp. 35-46.

Nagel, R.N. and Dove, R. (1991), "21st Century Manufacturing Enterprise Strategy: An Industry-Led View", 58, Iacocca Institute, Bethlehem.

Nanda, A. (1996), "Resources, capabilities, and competencies", Organisational Learning and Competitive Advantage, SAGE Publications Ltd., London, pp. 93-120.

O'Neill, H. and Sackett, P. (1994), "Extended Manufacturing Enterprise Paradigm", Management Decision, Volume 32, No.8, pp. 42-49.

Orlicky, S. (1975), "Material Requirements Planning", MacGraw-Hill, New York.

Parks, C.M., Koonce, D.A., Judd, R.P., and Johnson, M. (1997), "An Integrated Manufacturing Systems Design Environment", Computers Industrial Engineering Volume 33, No.1-2, pp. 341-344.

Parunak, V. (1994), "Technologies for Virtual Enterprises: A Proposal for NIST ATP, NCMS – National Center for Manufacturing Sciences.

Patankar, A.K. and Adiga, S. (1995), "Enterprise Integration Modelling: A Review of Theory and Practice", Computer Integrated Manufacturing Systems, Volume 8, No. 1, pp. 21-34.

Petts, N. (1997), "Building Growth on Core Competencies – a Practical Approach", Long Range Planning, Volume 30, No. 4, pp. 551-561.

Prahalad, C.K, and Hamel G. (1990), "The core competence of the corporation", Harvard Business Review, May-June, pp. 79-91.

Prahalad, C.K (1993), "The role of competence of the corporation", Research Technology Management, November-December, pp. 40-47.

Preiss, K. (1997), "A Systems Perspective of Lean and Agile Manufacturing", Agility & Global Competition, Volume 1, No. 1, pp. 59-75.

Quinn, J.B. (1992),"The Intelligent Enterprise: A New Paradigm", Academy of Management Executive, Volume 6, No. 4, pp. 48-63.

Ranky, P.G. (1994), "Concurrent engineering and enterprise modelling", Assembly Automation, Volume 14, No. 3, pp. 14-21.

Revenaugh, D.L (1994), "Business Process Re-engineering: The Unavoidable challenge", Management Decision, Volume 32, No. 7, pp. 16-27.

Robert, I. (1997), "BPR for SMEs", Manufacturing Engineer, December, pp. 261-263.

Saaty, T.L. (1990), "The Analytic Hierarchy Process", McGraw-Hill Company, New York.

Saaty, T.L. and Kearns, K.P. (1985), "Analytical Planning", Pergamon Press, Oxford, 1985.

Sako, M. (1992), "Prices, Quality and Trust", Cambridge University Press, Cambridge.

Schoderbeck, P.P., Schoderbeck, C.G.., and Kelfas, A.G. (1990), "Management Systems: Conceptual Considerations" Homewood, Illinois: BPI Irwin.

Scott, W.R. (1981), "Organizations: Rational, Natural, and Open Systems", Prentice-Hall Inc., New Jersey.

Sehdev, K., Fan, I-S, Cooper, S. and Williams, G. (1995), "Design for manufacture in the aerospace extended enterprise", World Class Design to Manufacture, Volume 2, No. 2, pp. 28-33.

Siegal, S (1991), "Engineering Change Order (ECO) and Concurrent Engineering", Concurrent Engineering: Research and Applications, Volume 3, No. 3, pp. 61-69

Simpson, D. (1994), "How to identify and enhance Core Competencies", Planning Review, Volume 22, No.6, pp. 24-26.

Singh, N.N (1996), "Systems Approach to Computer Integrated Design and Manufacturing", John Wiley and Sons, New York.

Skyrme, D. (1996), "Networking to a Better Future – Management Insights, http://www.hiway.co.uk/skyrme/insights/insights.html.

Smeltzer, L. (2001), "Small and Medium Enterprises in the Supply Chain", Global Supply Chain, May-June, pp. 27-30.

Snow, C.C. and Hrebiniak, L.G. (1980), "Strategy, distinctive competence, and organizational performance", Administrative Science Quarterly, Volume 25, pp.317-336.

Srisoepardani, K.P. (1996), "The Possibility Theorem for Group Decision-Making: The Analytic Hierarchy Process", Katz Graduate School of Business, University of Pittsburgh, Pittsburgh, Pennsylvania, Unpublished PhD. dissertation, pp. 76-109.

Stalk, G., Evans, P., and Shulman, L.E. (1992), "Competing on Capabilities: The New Rules of Corporate Strategy", Harvard Business Review, March-April, pp. 57-69.

Stuart, F.I. (1997), "Supply-Chain strategy: organisational influence through supplier alliances", British Journal of Management, Volume 8, pp. 223-236.

Supply-Chain Council Inc. (1999), "What is Supply Chain", http://www.supply-chain.org/html/faq.htm

Sweet, P. (2001), "Fighting the same battles" in Conspectus – The IT Report for Directors and Decision Makers, June, pp.2-4.

Sycara, K and Roboam, M. (1991), "EMMA: An Architecture for Enterprise Modelling and Integration", Proceedings of the EuroCourse on Distributed Artificial Intelligence: Theory and Praxis, July, Italy, pp. 197-213.

Tampoe, M. (1994), "Exploiting the core competencies of your organization", Long Range Planning, Volume 27, No. 4, pp. 66-77.

Teece, D, (1982), "Toward an Economic Theory of the Multiproduct Firm", Journal of Economic Behavior and Organization, Volume 3, pp. 39-63.

Teng, J.T-C., Grover, V., and Fielder, K.D. (1994), "Business Process Re-engineering: Charting a Strategic Path for the Information Age", California Management Review, Volume 36, No. 3, pp. 9-31.

Thompson, J.D. (1967), "Organizations in Action", McGraw-Hill, New York.

Tinnilä, M. (1995), "Strategic perspective to business process redesign", Business Process Management Journal, Volume 1, No.1, pp. 44-59.

Turner, D. and Crawford, M. (1994), "Managing current and future competitive performance: the role of competence" in: Competence-Based Competition (edited by G Hamel and A Heene), pp. 70-110.

Underdown, D.R. (1997), "An Enterprise Transformation Methodology", Unpublished Ph.D Dissertation, The University of Texas at Arlington, pp. 69-88.

Valentine, R. and Knights, D. (1998), "TQM and BPR - can you spot the difference?", Personnel Review, Volume 27, No. 1, pp. 78-85.

Van Gigch, J.P. (1991), "System Design Modeling and MetaModeling", Plenum Press, New York.

Van Houten, F.J.M. (1992), "Manufacturing Interfaces", Annals of CIRP, Volume 41, No. 1, pp. 699-710.

Vernadat, F.B. (1993), "CIMOSA: Enterprise Modelling and Enterprise Integration Using a Process-Based Approach", Proceedings of the JSPE/IFIP TC5/WG5.3, Workshop on the Design of Information InfrastructureSystems for Manufacturing, November, Tokyo, Japan, pp. 65-79

Vernadat, F.B. (1996), "Enterprise Integration: On Business Process and Enterprise Activity Modelling", Concurrent Engineering: Research and Applications, Volume 4, No. 3, pp. 219-228.

Wang, Z-Y, Rajurkar, K.P. and Kapoor, A. (1996), "Architecture for Agile Manufacturing and Its Interface Withe Computer Integrated Manufacturing", Journal of Materials Processing Technology, Volume 61, pp. 99-103.

Wells, M.G. (2000), "Business process re-engineering implementations using Internet technology", Business Process Management Journal, Volume 6, No 2, pp. 164-184.

Williams, B., (1999), "Advanced Supplier Partnerships" presented by Blair Williams from AT&T in a seminar organised by the Institute of Operation and Management (IOM) and the University of Huddersfield, July, Huddersfield, UK.

Wong, C.M. and Kleiner, B.H. (2001), "Fundamentals of material requirements planning", Management Research News, Volume 24, No. 3,4, pp. 9-12.

Wortmann, J.C. (1998), "Evolution of ERP Systems", Proceedings of the International Conference on the Manufacturing Value Chain, August, pp. 11-23.

Youssef, M.A. (1992A), "Getting to Know Advanced Manufacturing Technologies", Industrial Engineering, February, pp. 40-42.

Youssef, M.A. (1992B), "Agile Manufacturing: A Necessary Condition for Competing in Global Markets", Industrial Engineering, December, pp. 18-20.

Yusuf, Y.Y. and Little, D. (1998), "An empirical investigation of enterprise-wide integration of MRPII", International Journal of Operations & Production Management (IJOPM), Volume 18, No.1, pp. 66-86.

Yusuf, Y.Y. (1996), "The Extension of MRPII in Support of Integrated Manufacture", Ph.D. Theses, University of Liverpool.

Zairi, M. (1997), "Business process management: a boundaryless approach to modern competitiveness", Business Process Management Journal, Volume 3, No. 1, pp. 64-80.

APPENDICES

APPENDIX 1

Questionnaire

CIM AND EXTENDED ENTERPRISE SURVEY QUESTIONNAIRE

University of HUDDERSFIELD

BACKGROUND

Over the last two decades Computer Integrated Manufacture (CIM) has provided the major focus for integration of manufacturing systems. CIM may be regarded as the integrated implementation of Advanced Manufacturing Technology (AMT) and includes the linking of Computer Aided Design (CAD), Computer Aided Manufacture (CAM), Computer Aided Engineering (CAE), Material Requirement Planning (MRP), Manufacturing Resources Planning (MRP II), Computer Aided Process Planning (CAPP), etc. Typically, companies aim to use their CIM capability to competitive advantage, by improving/rationalising product design, reducing time to market, making effective use of inventory and manufacturing resources and by providing high levels of customer service.

For the majority of companies, CIM is essentially integration of internal capabilities and systems. However, it has been said that in today's environment it is no longer supplier versus supplier but supply chain versus supply chain.

With this in mind the University of Huddersfield has initiated a research project to investigate the requirements for CIM in such "extended enterprises". Companies, which fail to react appropriately in this new environment, may lose their competitive edge.

We thank you in anticipation of your help and assure you that your reply **will remain confidential**. However, if there is any section you feel unable or unwilling to complete, **please ignore**.

A. General Information

1. What is your main product/service? _____

2. What is the approximate number of employees in your company?

☐ 1 – 9 ☐ 100 - 249 ☐ more than 500
☐ 10 – 99 ☐ 250 - 499

3. What is your approximate annual turnover?

☐ up to £ 1.0 m ☐ £ 1.0 m - £ 10.0 m ☐ more than £ 10.0 m

4. How much, approximately, of your product cost is contributed by suppliers/sub-contractors?

☐ Less than 5 % ☐ 10 - 25 % ☐ More than 50 %
☐ 5 - 10 % ☐ 25 - 50 %

B. General Relationships with Suppliers/Customers

1. How often late delivery by your suppliers lead to poor performance with respect to your customer service?

☐ Rarely ☐ Occasionally ☐ Frequently ☐ Very frequently

2. Have you considered maintaining a closer relationship with your suppliers/customers by using a common database?

☐ Yes ☐ No

3. Which of the following criteria do you use when choosing your suppliers/sub-contractors?

☐ Shortest lead time ☐ Reliable products
☐ Cheapest in price ☐ Best technical support
☐ High quality product/service ☐ Other, please specify:

_____

4. What type of information do you provide your suppliers?

☐ Engineering/ Technical related
☐ Production planning
☐ Capacity planning
☐ Inventory level
☐ Forecasts
☐ Others, please specify:_____

5. Which of the following do you often use to communicate with your suppliers/sub-contractors?

☐ Mail by post ☐ Facsimile
☐ Electronic Mail (E-mail) ☐ Electronic Data Interchange (EDI)
☐ Telephone ☐ Intranet/Internet

6. Which one is the order winning criterion for your business?

Winning criteria

- ☐ Price
- ☐ Delivery
- ☐ Quality
- ☐ Reliability
- ☐ After sales services
- ☐ Innovative products
- ☐ Others: _____

C. CIM Elements (Internal)

1. What computer-based applications do you currently use?

- ☐ CAD/CAM
- ☐ CAE (Engineering Analysis e.g. Finite Element)
- ☐ NC/CNC/DNC
- ☐ CAPP (Computer Aided Process Planning)
- ☐ MRP/MRP II
- ☐ ERP
- ☐ Product Data Management
- ☐ E-mail
- ☐ Internet/Intranet
- ☐ Computer networks - LANs etc.
- ☐ Project Management Software
- ☐ Others, please specify: _____

2. Which of following objectives have been addressed by the implementation of computer based systems within the company?

- ☐ To speed-up engineering design and drafting process
- ☐ To control machinery/machine tools
- ☐ To improve communication inter departments/functions/activities
- ☐ To aid quality control process
- ☐ To assist production control
- ☐ To manage the project planning & scheduling
- ☐ Concurrent engineering
- ☐ To achieves higher flexibility during manufacturing processes
- ☐ To rationalise/standardise component used in the company's products
- ☐ Others, please specify:_____

3. Which CIM elements, if any, have you interfaced/integrated with other elements within your company?

- ☐ CAD/CAM
- ☐ CAE (Engineering Analysis e.g. Finite Element)
- ☐ CAD / CAE / CAM
- ☐ CNC / DNC Machines
- ☐ Office Administration Tools
- ☐ Product Data Management
- ☐ Project Management
- ☐ Document Management
- ☐ MRP / MRPII / ERP
- ☐ Quality Assurance System
- ☐ Workflow Management
- ☐ Others, please specify:_____

4. To what extent have the following benefits been gained from implementing CIM/CIM elements in your company?

Benefits

- ☐ Shorter product lead times
- ☐ Improved quality and control of information
- ☐ Faster access and retrieval of correct information
- ☐ Better communication amongst departments/functions
- ☐ More effective communication with suppliers/sub-contractors
- ☐ Reduced unproductive effort in support areas e.g. designs procurement, process planning, etc.
- ☐ Others, please specify:

5. How much has implementation of CIM elements improved the overall performance of your company?

☐ Considerably ☐ Moderately ☐ None

D. CIM Elements (External)

1. Have you interfaced any of your CIM elements with those of suppliers, sub-contractors or customers?

☐ Yes ☐ No

CIM AND EXTENDED ENTERPRISE SURVEY QUESTIONNAIRE

University of HUDDERSFIELD

2. If yes to the question above (no 1), which one?

- ☐ CAD/CAM
- ☐ CAE (Engineering Analysis e.g. Finite Element)
- ☐ CAD / CAE / CAM
- ☐ CNC / DNC Machines
- ☐ Office Administration Tools
- ☐ Product Data Management
- ☐ Project Management
- ☐ Document Management
- ☐ MRP / MRPII / ERP
- ☐ Quality Assurance System
- ☐ Workflow Management
- ☐ Others, please specify

3. Do you think you need to implement a strategy and system for integration of your CIM elements with those of your suppliers/customers?

☐ Yes ☐ No ☐ Not sure

4. How important are these elements of Information Technology to your company, with respect to supply chain integration?

Very important	Important	Not Important	Do not know	
☐	☐	☐	☐	Electronic Data Interchange (EDI)
☐	☐	☐	☐	Electronic Point Of Sales (EPOS)
☐	☐	☐	☐	Internet/Intranet
☐	☐	☐	☐	Email
☐	☐	☐	☐	Inventory Management Integration

5. How important is it for your company to integrate with your customers and suppliers?

Very important	Important	Not Important	Do not know
☐	☐	☐	☐

6. Are you aware of the concept of 'Goal Integration'?

☐ Yes ☐ No

7. Which of the following types of integration do you consider exist in your extended enterprise (i.e. the network of suppliers and sub-contractors and customers with whom you mostly associate)?

☐ Technical Integration ☐ Process Integration ☐ Goal Integration

8. Please tick the followings as barriers to supply chain integration in your company:

- ☐ lack of co-operation from principal partners
- ☐ lack of support from the top management
- ☐ lack of tangible benefits identified elsewhere
- ☐ lack of perceived benefits for our company
- ☐ no relevance whatsoever to our industry

9. Please tick the effect of the following in persuading your company to exchange information with key partners?

- ☐ Pressure from customers
- ☐ Pressure from suppliers
- ☐ Technology become available
- ☐ Perceived benefits for ourselves
- ☐ Do not know

10. Do you discuss/manage the following with your key suppliers/customers?

Yes	No	
☐	☐	Buying
☐	☐	Purchase order processing
☐	☐	Production planning
☐	☐	Manufacturing process/process planning
☐	☐	Engineering/product design
☐	☐	Inventory or/and transport
☐	☐	Sales order processing
☐	☐	Engineering/technical related matters
☐	☐	Others, please specify:_____

CIM AND EXTENDED ENTERPRISE SURVEY QUESTIONNAIRE

University of HUDDERSFIELD

11. How do you judge/value the following items as the resources to link your company with your customers and suppliers/sub-contractors?

Very important	Important	Not Important	Do not know	
☐	☐	☐	☐	Technology Transfer/development
☐	☐	☐	☐	Product development
☐	☐	☐	☐	Capacity rationalisation
☐	☐	☐	☐	Shared marketing strategy
☐	☐	☐	☐	Computer Integrated Manufacturing (CIM)

12. How well do you feel your company strategy and systems provide for:

Very well	Satisfactory	Average	Poorly	
☐	☐	☐	☐	Agility
☐	☐	☐	☐	Lean Manufacture
☐	☐	☐	☐	World Class Manufacture

13. How well does your supply chain support the agility of your business?

Very well	Satisfactory	Average	Poorly
☐	☐	☐	☐

14. Please tick the following as your objectives within your supply chain:

- ☐ Reduced costs
- ☐ Reduced lead times
- ☐ Improved quality
- ☐ Enhanced reliability & flexibility

15. Please provide details or alternatively attach your business name card.

Name: _____

Position held: _____

Company's name: _____

Address: _____

_____

Phone/Fax/Email: _____

Thank you for participating on our questionnaire, we promise that all the information you have given on this questionnaire will be treated in a **strict confidence**. We will be happy to keep you up-to-date with the results of the research. If you would like to become more involved in the research or feel that you would like to contribute in some other way, please contact us directly at the address below. Thank you once more for your kind help.

Please return this completed questionnaire to:

Mr. ERRY ADESTA
Researcher
Department of Mechanical Engineering & Manufacturing Systems, Queensgate, Huddersfield HD1 3DH, England, UK

Phone no : 01484 473264
Fax no : 01484 472340 E-mail: e.adesta@hud.ac.uk

COMMENTS: (you may continue on a separate sheet if you wish)

APPENDIX 2

The Interview

2.1. Interview Questions

2.2. Response Samples

2.3. Cross-case Analysis Matrix

APPENDIX 2.1

Interview Questions

Disclaimer:

1. This information will be kept confidential
2. A report will be written for your company
3. Final results of the study will be used as part of the thesis submitted to the University of Huddersfield

Respondent information:

1. What is your job title?
2. What are your duties and responsibilities within this company?
3. How long have you worked for this company?
4. How long have you held your current position?

Vision toward EE – a statement of what the company aspires to involve in EE.

1. Does your company have the vision toward closer collaborations with external entities, i.e. suppliers, sub-contractors, partners, and customers? If yes what is it?
2. Were you involved in developing the vision toward EE? If yes, how did your company develop this vision?
3. How would you approach and develop your vision differently if you could do it again?
4. What action has your company taken to communicate the vision?
5. What would you do differently if you could communicate your vision again?

Process – a series of enterprise activities organised to meet a desired goal.

1. What is your core process i.e. your core competence?
2. Have your company rationalised its core competence with respect to move towards EE?
3. What actions did your company take to change manufacturing processes?
4. How have process improvement activities been performed?
5. What actions did your company take to change support processes?
6. What impact has technology implementation had on manufacturing process improvement?
7. What impact has technology implementation has on support process improvement?

Technology – appropriate application of knowledge in accomplishing a task

1. What actions has your company taken to implement technology?
2. How does your organisation make the decision to implement technology?
3. Has the decision making process to implement technology changed? If yes, how?
4. Has technology changed your culture? If yes, how?
5. When is technology considered during process improvement activities?
6. When actions to change technology would you do differently if you could do it again?

Culture – the customary beliefs, social norms, and material traits of a social group

1. Has your culture changed? If yes, how?
2. What actions has your company taken to change your culture?
3. What actions to change your culture would you do differently if you could do it again?
4. What actions has your company taken to build trust between your company and its external entities, i.e. suppliers, sub-contractors, partners, and customers alike?
5. What actions to build trust would you do differently if you could do it again?

6. What actions has your company taken to improve communications within company and between company and its external entities, i.e. suppliers, sub-contractors, partners, and customers?
7. What actions to improve communication would you do differently if you could do it again?

Planning towards EE – the process of conceiving a desired future and developing a practical means of achieving it

1. Does your company have a formal plan towards EE?
2. Were you involved in developing the plan?
3. What plans did your company make to transform to EE?
4. How did your company develop your plan?
5. How was the plan communicated?
6. How would you develop your plan differently if you could do it again?

APPENDIX 2.2

Response Sample no. 01

Respondent information:

1. What is your job title? *Account Manager.*
2. What are your duties and responsibilities within this company?
   Look after company accounting systems.
3. How long have you worked for this company?
   4 years and 5 months.
4. How long have you held your current position?
   1 year and 2 months.

Vision toward EE – a statement of what the company aspires to involve in EE.

1. Does your company have the vision toward closer collaborations with external entities, i.e. suppliers, sub-contractors, partners, and customers? If yes what is it?
   Yes. We always view our partners (that is including suppliers, sub-contractors and customers) as an important part of our business processes.
2. Were you involved in developing the vision toward EE? If yes, how did your company develop this vision?
   Yes. We develop this vision through closer collaboration both with our suppliers as well as customers.
3. How would you approach and develop your vision differently if you could do it again?
   We should have started this close collaboration with full support, active involvement and commitment from key decision-makers (functional managers) within our company and within our partners' company.
4. What action has your company taken to communicate the vision?
   Increase the number of regular meeting with our employees as well as our partners' employees and key decision-makers.

5. What would you do differently if you could communicate your vision again?
   Reduce the number of physical meetings and at the same time increase communication through electronic-meeting via the Internet.

Process – a series of enterprise activities organised to meet a desired goal.

1. What is your core process i.e. your core competence?
   Cleaning and degreasing equipment and systems.
2. Have your company rationalised its core competence with respect to move towards EE?
   No, it has not.
3. What actions did your company take to change manufacturing processes?
   Implementing Business Process Re-engineering (BPR).
4. How have process improvement activities been performed?
   By focusing on core processes and by sub-contracting non-core processes (secondary) processes or outsourcing.
5. What actions did your company take to change support processes?
   By justifying value added contribution of each of the processes involved.
6. What impact has technology implementation had on manufacturing process improvement?
   Hi-tech involves high cost. It is currently difficult to justified to implement such a hi-tech.
7. What impact has technology implementation has on support process improvement?
   Better and improved intra departmental/functional communication.

Technology – appropriate application of knowledge in accomplishing a task.

1. What actions has your company taken to implement technology?
   Hire a consultant on IT implementation for sales and purchasing systems.
2. How does your organisation make the decision to implement technology?
   It's a top-down approach; usually it's a top management decision.
3. Has the decision making process to implement technology changed? If yes, how?
   Not at the moment.

4. Has technology changed your culture? If yes, how?

   Yes. It is now possible for sales and purchasing department to interact and communicate electronically. It has reduced paper work significantly and the two departments appear to have an improved relationship. Most importantly, they are now able to response faster to enquiries.

5. When is technology considered during process improvement activities?

   When it involves automation processes.

6. When actions to change technology would you do differently if you could do it again?

   After detailed business processes have been drawn and agreed upon by all parties involved.

Culture – the customary beliefs, social norms, and material traits of a social group.

1. Has your culture changed? If yes, how?

   Yes, the need to rely on your team because we share the same systems and data on computer networks.

2. What actions has your company taken to change your culture?

   Nothing that I am aware of.

3. What actions to change your culture would you do differently if you could do it again?

   It should start from the top man in the company.

4. What actions has your company taken to build trust between your company and its external entities, i.e. suppliers, sub-contractors, partners, and customers alike?

   Do not know

5. What actions to build trust would you do differently if you could do it again?

   Do not know

6. What actions has your company taken to improve communications within company and between company and its external entities, i.e. suppliers, sub-contractors, partners, and customers?

   Using email and company's web site.

7. What actions to improve communication would you do differently if you could do it again?

   Improved and increased use of e-communication such as email, chatting, and video conferencing.

Planning towards EE – the process of conceiving a desired future and developing a practical means of achieving it.

1. Does your company have a formal plan towards EE?

   Not that I am aware of.

2. Were you involved in developing the plan?

   N/A.

3. What plans did your company make to transform to EE?

   Don't know.

4. How did your company develop your plan?

   Don't know.

5. How was the plan communicated?

   N/A.

6. How would you develop your plan differently if you could do it again?

   N/A.

Response Sample no. 02

Respondent information:

1. What is your job title? *Director of Engineering.*
2. What are your duties and responsibilities within this company?

   I am in-charge of Engineering Department within the company.
3. How long have you worked for this company?

   More than 12 years.
4. How long have you held your current position?

   4 years and 5 months.

Vision toward EE – a statement of what the company aspires to involve in EE.

1. Does your company have the vision toward closer collaborations with external entities, i.e. suppliers, sub-contractors, partners, and customers? If yes what is it?

   Yes. We view our partners as part of our strategic planning. Our relationships with our suppliers and contractors have been improved significantly compared to what it was 5 year ago. Our company maintains a database of preferred suppliers which some of them began their business with us as far back as 15 year ago.
2. Were you involved in developing the vision toward EE? If yes, how did your company develop this vision?

   Yes. To what I understand EE is an extension to Supply-chain Management (SCM) Concept. Since our company has adapted SCM for years I don't see any significant problem to progress towards EE.
3. How would you approach and develop your vision differently if you could do it again?

   This company needs to involve its staff pro-actively in understanding company vision and mission. I feel that not all the staff has a clear picture about company's vision and mission. Since working closer with external entities (suppliers and sub-contractors) has been viewed as an important issue, we need to address these clearly to all levels within the company.

4. What action has your company taken to communicate the vision?

   There are mainly two methods. First method is by training the employees formally and informally and the second one is through company's newsletter.

5. What would you do differently if you could communicate your vision again?

   Make best use of available Information Technology such as email, company intranet and the Internet.

Process – a series of enterprise activities organised to meet a desired goal.

1. What is your core process i.e. your core competence?

   Automotive Parts Manufacturer.

2. Have your company rationalised its core competence with respect to move towards EE?

   No, but we would like very much to adopt the concept.

3. What actions did your company take to change manufacturing processes?

   Through utilising the concept of Concurrent Engineering, JIT, etc.

4. How have process improvement activities been performed?

   Through adopting Business Process Re-engineering.

5. What actions did your company take to change support processes?

   By outsourcing and rationalising some of the processes.

6. What impact has technology implementation had on manufacturing process improvement?

   Information Technology has had a significant impact on the way we are doing our business. By implementing the Concurrent Engineering concept supported by some commercially available low-cost software. Our company has significantly reduced lead-times for some of our products.

7. What impact has technology implementation has on support process improvement?

   Better communication with our key suppliers and partners.

Technology – appropriate application of knowledge in accomplishing a task.

1. What actions has your company taken to implement technology?

   By forming task group and hiring consultant.

2. How does your organisation make the decision to implement technology?

   For hi-tech decision which may involve a large amount of investment usually trough senior management act and approved board of directors.

3. Has the decision making process to implement technology changed? If yes, how?

   Not at the moment.

4. Has technology changed your culture? If yes, how?

   Yes. Majority of people in our company have now realised that they must trust their colleagues due to shared and "open" information among them through company databases systems. This is because the implementation on information technology in our company.

5. When is technology considered during process improvement activities?

   We view implementation on "latest" technology is a must when you are in discrete product manufacture business. Hence we rely on our Research and Development team to advise our key decision-makers to implement such technology.

6. When actions to change technology would you do differently if you could do it again?

   I personally feel that our company needs to have a structured mechanism to anticipate in technology development. This will help us to decide what kind, when and how to implement "new" technology for our company.

Culture – the customary beliefs, social norms, and material traits of a social group.

1. Has your culture changed? If yes, how?

   Yes. It affects our way of doing things. People need to share information and trust their partners.

2. What actions has your company taken to change your culture?

   Through short courses and training.

3. What actions to change your culture would you do differently if you could do it again?

   I personally feel that culture cannot be changed. It may adapt to suit its environment. Therefore, it is senior management's responsibility to make sure that the company's work force is ready to adapt with the evolving culture.

4. What actions has your company taken to build trust between your company and its external entities, i.e. suppliers, sub-contractors, partners, and customers alike?
   By improving the line of communication with their key decision-makers and regular meeting electronically and physically.
5. What actions to build trust would you do differently if you could do it again?
   Through social gathering among senior management and the workforce from both organisations.
6. What actions has your company taken to improve communications within company and between company and its external entities, i.e. suppliers, sub-contractors, partners, and customers?
   By utilising local area network, Intranet and Internet.
7. What actions to improve communication would you do differently if you could do it again?
   Earlier implementation of such electronic communication.

Planning towards EE – the process of conceiving a desired future and developing a practical means of achieving it.

1. Does your company have a formal plan towards EE?
   Not at the moment but we are interesting in learning more about it.
2. Were you involved in developing the plan?
   I will.
3. What plans did your company make to transform to EE?
   Do not know yet.
4. How did your company develop your plan?
   N/A.
5. How was the plan communicated?
   N/A.
6. How would you develop your plan differently if you could do it again?
   N/A.

Response Sample no. 03

Respondent information:

1. What is your job title? *Director*
2. What are your duties and responsibilities within this company?

   New business development
3. How long have you worked for this company?

   7 Years
4. How long have you held your current position?

   7 Years

Vision toward EE – a statement of what the company aspires to involve in EE.

1. Does your company have the vision toward closer collaborations with external entities, i.e. suppliers, sub-contractors, partners, and customers? If yes what is it?

   Yes. We require a very close collaboration with our clients as the games development process required externally deliverable items such as video footage, audio (vocal and music), and foreign language translations to be delivered by the client. The quantity of items delivered is extremely large, and without collaboration, integration of the items into the finished product would be an extremely time consuming (and costly) process.
2. Were you involved in developing the vision toward EE? If yes, how did your company develop this vision?

   I work with each client to create a method of delivery of items suitable to both them and ourselves, such that the deliverables may be integrated into the game
3. How would you approach and develop your vision differently if you could do it again?

   The approach is constantly being reviewed as each game may have a different client or set of requirements.
4. What action has your company taken to communicate the vision?

   Regular communication on at least a weekly basis with the client via email or phone, also regular visits by the client to our offices.

5. What would you do differently if you could communicate your vision again?

   None

Process – a series of enterprise activities organised to meet a desired goal.

1. What is your core process i.e. your core competence?

   Development of Computer Games for Consoles such as PlayStation, PlayStation 2, GameCube and Xbox.

2. Have your company rationalised its core competence with respect to move towards EE?

   No.

3. What actions did your company take to change manufacturing processes?

   Development processes are constantly modified to suit particular clients' delivery requirements, and clients supply of required assets

4. How have process improvement activities been performed?

   Constant monitoring and analysing of methods and working practices is performed. Based on this, working practices are constantly reviewed and modified to increase productivity.

5. What actions did your company take to change support processes?

   None.

6. What impact has technology implementation had on manufacturing process improvement?

   Major increases in technology of the target platform generally increase the cost, risk and development time for a computer game. This is due to the increased visual appeal and immersive appeal the game buying public demand from newer technologies. To achieve this, a larger workforce is required, increasing initial costs, and therefore requiring greater commercial success to make a profit – thus the risk is far greater.

7. What impact has technology implementation has on support process improvement?

   Delivery of externally required assets has been greatly improved. All assets included in a game are obviously deliverable in an electronic form. Previously, these would be delivered on CD via courier, which (as the supplier may be US

based) would take typically 3 days. Due to high-speed Internet access (via leased lines) these assets are quickly and easily downloadable in minutes, from suppliers based anywhere in the world.

Technology – appropriate application of knowledge in accomplishing a task.

1. What actions has your company taken to implement technology?
   Not applicable – the company has always been technology based.
2. How does your organisation make the decision to implement technology?
   Particular games consoles require the use of particular hardware. Otherwise it is an upper management decision on implementation of new and upgrading of existing technology.
3. Has the decision making process to implement technology changed? If yes, how?
   No..
4. Has technology changed your culture? If yes, how?
   No, as it has been in used from the start.
5. When is technology considered during process improvement activities?
   Not applicable. Technology is always used
6. When actions to change technology would you do differently if you could do it again?
   None.

Culture – the customary beliefs, social norms, and material traits of a social group.

1. Has your culture changed? If yes, how?
   As complexity of hardware increases the teams which people work within have increased.
2. What actions has your company taken to change your culture?
   None.
3. What actions to change your culture would you do differently if you could do it again?
   None.

4. What actions has your company taken to build trust between your company and its external entities, i.e. suppliers, sub-contractors, partners, and customers alike?
   External suppliers always receive prompt payment. Clients constantly receive status reports on the projects and monthly builds of the game for review to boost confidence in the project being complete on time.
5. What actions to build trust would you do differently if you could do it again?
   None.
6. What actions has your company taken to improve communications within company and between company and its external entities, i.e. suppliers, sub-contractors, partners, and customers?
   None.
7. What actions to improve communication would you do differently if you could do it again?
   Reduce the reliance on email, and increase the use of telephone as a method of communication for more important and urgent requirements.

Planning towards EE – the process of conceiving a desired future and developing a practical means of achieving it.

1. Does your company have a formal plan towards EE?
   No.
2. Were you involved in developing the plan?
   Not Applicable.
3. What plans did your company make to transform to EE?
   None.
4. How did your company develop your plan?
   Not Applicable.
5. How was the plan communicated?
   Not Applicable.
6. How would you develop your plan differently if you could do it again?
   Not Applicable.

APPENDIX 2.3

Cross-case Analysis Matrix

Issues	Views	C1	C2	C3	C4	C5	C6	C7	C8	C9	C10	C11	C12	C13	C14
Vision	Clear vision about EE at corporate level													1	
	Full support from Top Management level													1	
	Improving staff understanding in company's vision	1	1	1			1	1		1		1		1	1
	Improving communication to support EE	1	1	1	1	1	1	1	1	1	1	1		1	1
	EE to support enhanced agility	1	1	1	1	1	1		1	1	1	1	1	1	
Process	Recognition of the concept of core competencies	1	1	1	1	1	1	1	1	1		1	1	1	
	Focus on core competencies			1	1	1	1	1	1	1	1	1		1	
	Sub-contracting secondary activities		1				1							1	
	BPR to support process improvement	1				1		1	1		1		1		
	Technology impact on process improvement	1	1		1		1			1		1	1	1	1
Technology	High cost associated with hi-tech products	1		1		1		1	1		1		1	1	1
	Shared technology for product development costs		1	1	1	1	1	1	1	1	1	1	1	1	1
	Technology improves inter-enterprise integration	1	1	1	1		1	1	1	1	1	1	1	1	1
	Technology improves competitiveness and agility	1	1	1		1		1	1		1		1	1	1
	Technology has changed culture within company				1		1				1		1	1	1
Culture	Reservations to change due to lack of trust	1	1	1	1	1	1	1	1	1		1	1	1	1
	Reservations to change due to loss of control	1	1	1	1	1	1	1	1	1	1	1	1	1	1
	Fears to change due to difficulty in communication	1	1	1	1	1	1	1	1	1	1	1	1	1	1
	Fears to change due to job security	1	1	1	1	1	1	1	1	1	1	1	1	1	1
	Fears to change due to sensitive information	1	1	1	1	1	1	1	1	1	1	1	1	1	1
Planning	Formal plan exists														
	Top management active involvement													1	
	Pilot project being set-up													1	
	External assistance is being sought													1	
	Plan is well communicated to all staff													1	

Issues	Views	C15	C16	C17	C18	C19	C20	C21	C22	C23	C24	C25	C26	Total
Vision	Clear vision about EE at corporate level			1									1	3
	Full support from Top Management level												1	2
	Improving staff understanding in company's vision					1		1		1			1	13
	Improving communication to support EE	1	1	1	1		1		1		1			20
	EE to support enhanced agility	1	1	1	1	1	1	1			1	1	1	22
Process	Recognition of the concept of core competencies	1		1	1	1	1	1	1	1		1	1	22
	Focus on core competencies		1	1	1	1	1	1	1	1	1	1		20
	Sub-contracting secondary activities							1		1				5
	BPR to support process improvement			1		1			1					9
	Technology impact on process improvement	1	1		1		1	1			1	1	1	17
Technology	High cost associated with hi-tech products	1	1	1		1		1	1	1	1	1	1	19
	Shared technology for product development costs	1	1	1	1		1	1	1	1	1	1	1	24
	Technology improves inter-enterprise integration	1	1	1	1	1	1	1		1	1	1	1	24
	Technology improves competitiveness and agility	1	1			1			1		1	1	1	17
	Technology has changed culture within company		1	1	1	1		1		1	1			13
Culture	Reservations to change due to lack of trust	1	1	1	1	1	1		1	1	1	1	1	24
	Reservations to change due to loss of control	1	1	1	1	1	1	1	1	1	1	1	1	26
	Fears to change due to difficulty in communication	1		1	1	1	1	1		1	1	1	1	24
	Fears to change due to job security		1		1	1	1		1	1	1	1	1	23
	Fears to change due to sensitive information	1	1	1	1	1	1	1	1	1	1	1		25
Planning	Formal plan exists			1										1
	Top management active involvement													1
	Pilot project being set-up			1										2
	External assistance is being sought			1									1	3
	Plan is well communicated to all staff			1									1	3

APPENDIX 3

Publications

A3.1. A Three Dimensional Perspective on Extended Manufacturing Enterprise, The Proceedings of the 5th International Conference on Concurrent Enterprising (ICE), 15-17 March 1999, The Hague, Netherlands, pp. 61-68.

A3.2. Extended CIM: From Extended Supply Chain to Extended Enterprise, The Proceedings of the 15th International Conference on Computer-Aided Production Engineering (CAPE), 19-21 April 1999, Durham, United Kingdom, pp. 643-648.

A.3.3. An Extended CIM Model for the Extended Manufacturing Enterprise, The Proceedings of the 15th International Conference on Production Research (ICPR), 9-13 August 1999, Limerick, Republic of Ireland, pp. 1573-1576.

A Three Dimensional Perspective on Extended Manufacturing Enterprise

P.F. Kelly[1], D. Little[1], E.Y.T. Adesta[2]
[1]The University of Huddersfield, Queensgate, Huddersfield HD1 3DH, UK,
{p.f.kelly,d.little@hud.ac.uk}
[2]Universitas Tarumanagara, Jl. Letjend. S.Parman no. 1 Jakarta 11440, Indonesia,
eadesta@cbn.net.id

Abstract

In the highly competitive and volatile markets of the 21st century, manufacturing organisations must be agile and efficient in their response to rapidly changing customer requirements. Increasingly companies are concentrating upon the development of their core competences and making increasing use of their suppliers and sub-contractors. However, the competition in best practice manufacturing business is no longer supplier against supplier but supply chain versus supply chain (Craven, 1998).

The extended enterprise may be considered as a logical progression from the extended supply chain, which requires close collaboration of all participating businesses. As such, these independent enterprises need to integrate their goals as well as their logistics in order for them to be able to collaborate effectively in the long term.

An investigation of extended enterprise practice within a developing country is currently underway at The University of Huddersfield. This is based on a questionnaire, a series of case studies and a series of semi-structured interviews with a range of companies in Indonesia. This paper discusses a simple model for the extended supply chain concept and develops it further into the concept of the extended enterprise and then examines the implications of these for the developing nations.

Keywords

Supply chain, Extended enterprise, Goal integration, Agility, Core competence

1 Introduction

The term extended enterprise has been seen by some researchers as an implicit concept of supply chain management (O'Neill and Sackett, 1994; Weil, 1998). Jagdev and Browne (1998) argued that an extended enterprise is the formation of closer co-ordination in the design, development, costing and co-ordination of the respective manufacturing schedules of co-operating independent manufacturing businesses and related suppliers. Childe (1998) saw the extended enterprise from a supplier viewpoint as a conceptual business unit or system that consists of a purchasing company and suppliers who collaborate closely in such a way as to maximise the returns to each partner.

As the majority of manufacturing organisations fit into the category of Small to Medium size Enterprise (SME) i.e. companies having between 10 and 499 employees (Roberts, 1997) it follows that the majority of manufacturing enterprises within an extended enterprise will be SMEs. This is particularly the case with a developing country. With this in mind it would appear useful to provide an

appropriate model for the extended enterprise and to identify approaches which enable SMEs to maximise their effectiveness and hence their profitability in such environments.

2 The Supply Chain and Supply Chain Network

Supply chain (Lamey, 1996) is defined as:

> *"The flow of goods from the manufacturer to the retailer, supported by the flow of information between each supply chain participant".*

It has also been said that the term demand chain may be in favour to supply chain to emphasis that the network is driven by customer rather than supplier.

However, for the purpose of this paper the concept of the extended enterprise may be explained by modeling manufacturing enterprises within a global manufacturing universe as can be seen in figure 1. Within this global manufacturing universe we classify manufacturing enterprises into four categories micro, small, medium and large enterprises (Roberts, 1997) and this is represented by circles denoted with one small digit, one capital digit, two capital digits and three capital digits respectively. Each of the enterprises shown in figure 1 may be considered to be 'primary' enterprise i.e. one which exists to make profit from the sale of its associated goods and/or services and in doing so will make use of a chain of suppliers. In some cases these enterprises may have re-engineered' their operations, concentrating upon their 'core competences' and making use of an 'extended' supply chain, or supply chain network.

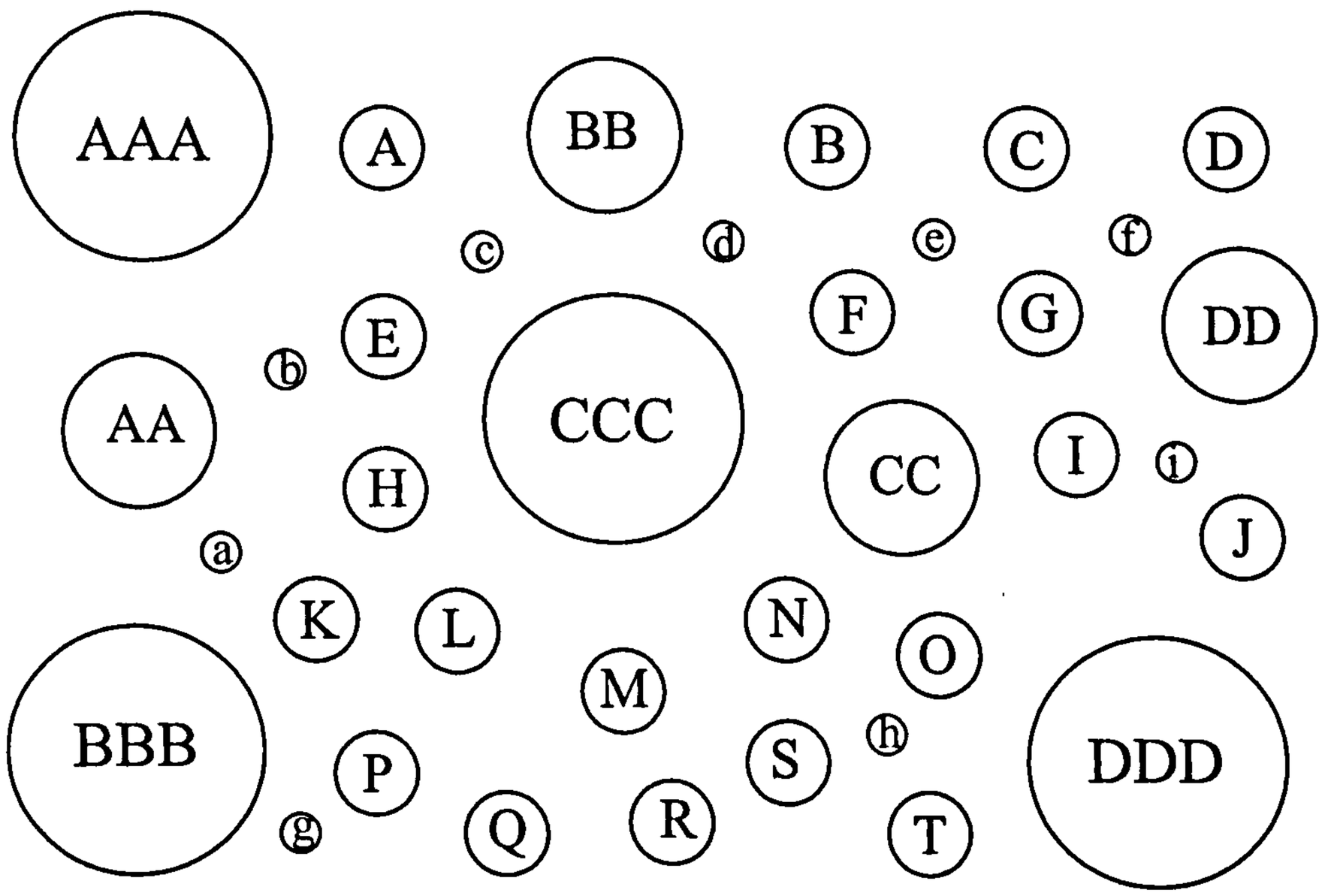

Figure 1: Global manufacturing universe

From the above it follows that a supply chain network may be defined in this paper as:

> *"A network comprising a primary enterprise i.e. an enterprise with direct or primary contact with the customers/clients for the provision of product or services and the secondary enterprises which provide supporting materials, products and/or services".*

It is understood that every enterprise has its own goal. However, this goal should also satisfy the goal of the extended enterprise. If this is so, there will be no conflict between the goal of an individual company within the network and the goal of the extended enterprise itself.

One way to do ensure this state of affairs is to rationalise the goals of each enterprise so that they can be adapted to develop the overall shared goals of that specific extended enterprise. Since it appears that most firms have multidimensional goals, an operational method can be found for incorporating factors such as risk and profitability into firm's goal function to satisfy the requirements of the key stakeholders.

Using a case study approach, observation of some potential supply-chain networks within the global manufacturing universe, shows that the supplier-customer relationship is typically dictated by a common goal hidden amongst the goals of each enterprise. By mapping such supplier-customer relationships amongst companies involved in this case study, it can be seen from figure 2 below that, in a global supply chain network, the supplier-customer relationship becomes very complicated.

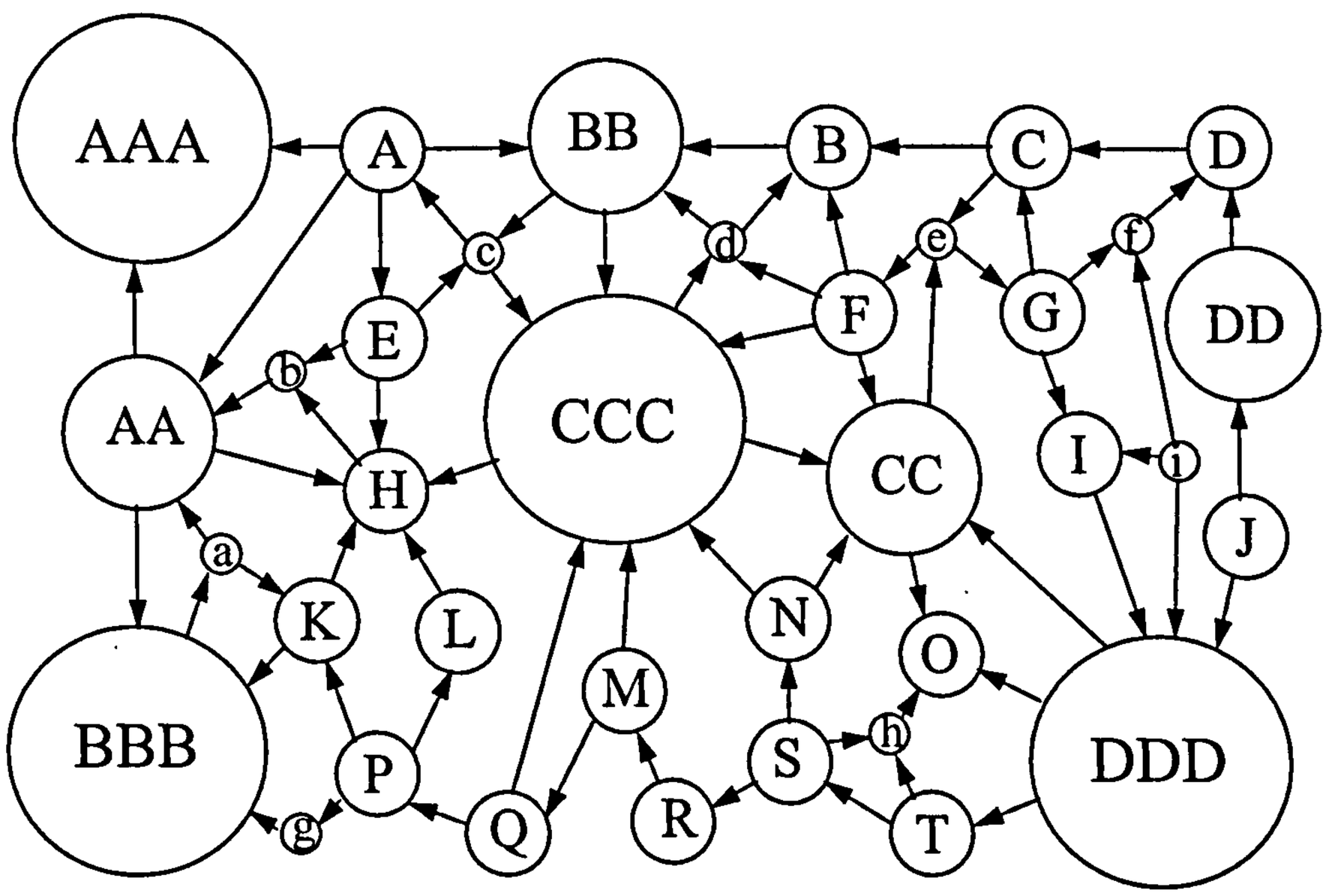

Figure 2: Global supply chain network

While the concept of a large enterprise as the centre of an extended supply chain is widely accepted, in some cases the primary enterprise may be a 'small' or even a 'micro' organisation, with one or more of the secondary organisations being categorised as 'large'. These two particular situations are illustrated in figure 3 and 4.

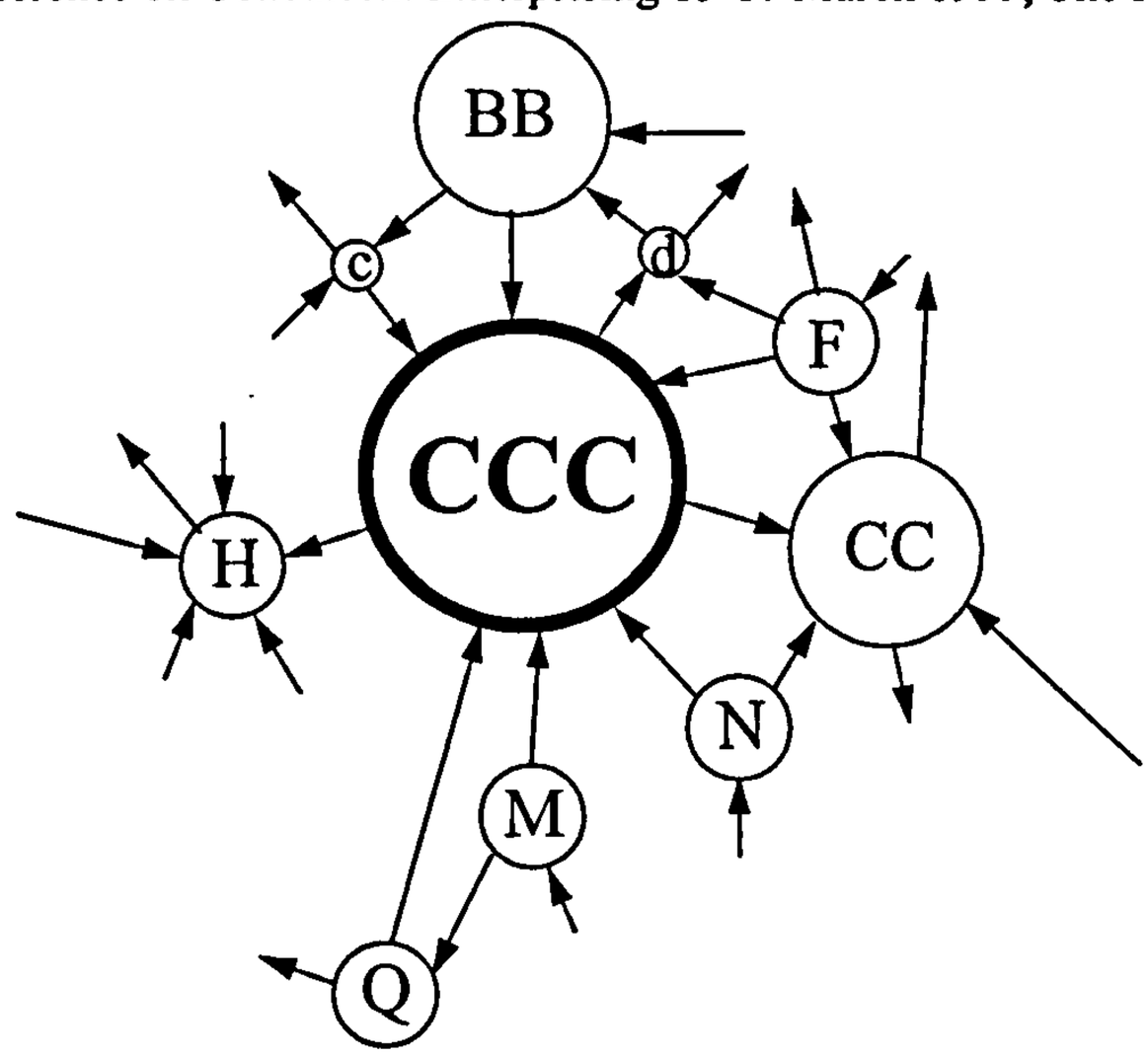

Figure 3: Supply chain with large company as the principal

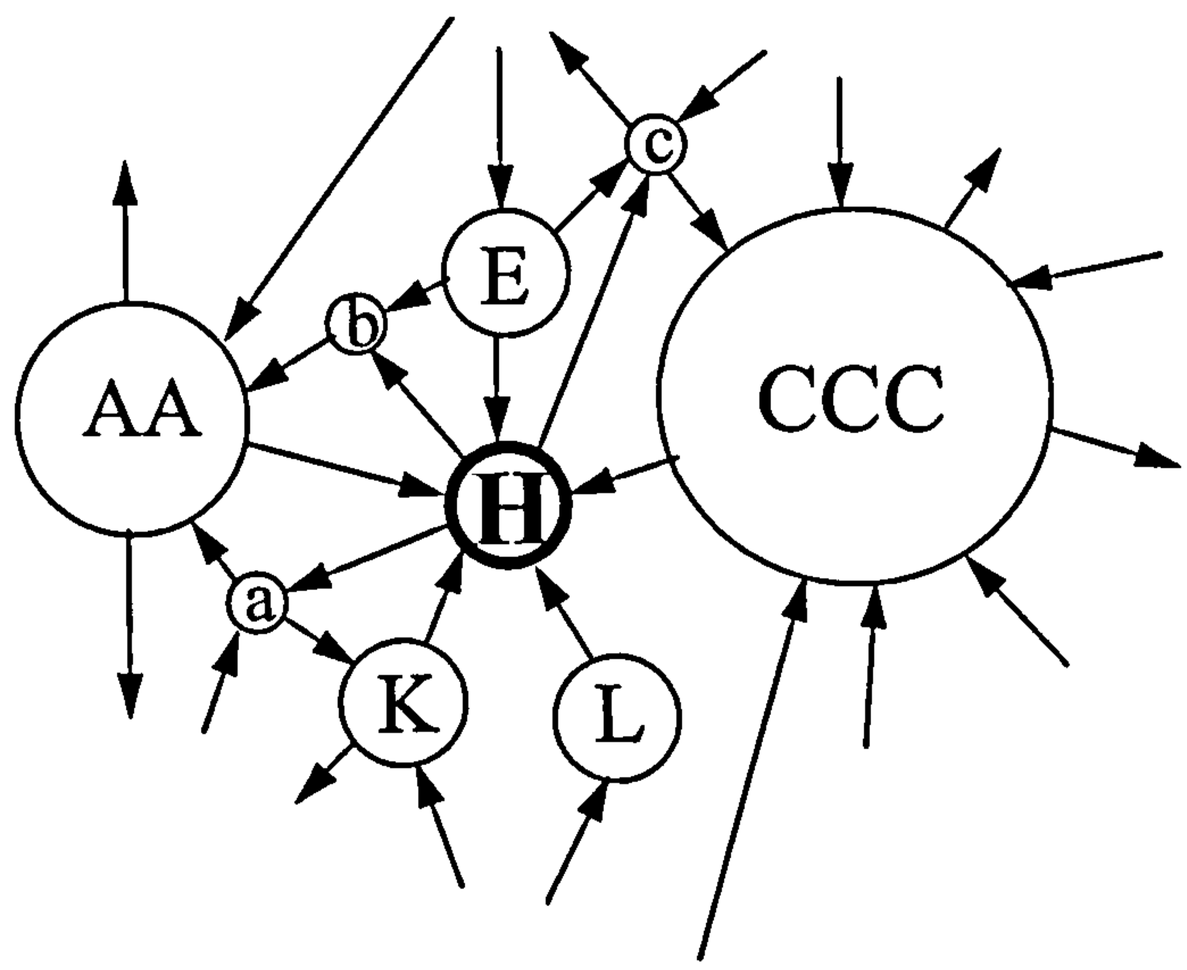

Figure 4: Supply chain with small company as the principal

Hence the focus of an extended supply chain may, in some circumstances, be the smallest individual enterprise in the chain. Given that all enterprises will consider themselves as 'primary' in their role as customers/clients and secondary in their role of supply/support to their customers/clients, the potential links and relationships within the global manufacturing environment are extensive, complex and dynamic. Further research into modeling of these relationships and its behaviour is being undertaken at the University of Huddersfield.

Given this situation, the qualification of 'extended enterprise' as defined by Childe (1998) as:

> *"A conceptual business unit or system that consists of a purchasing company and suppliers who collaborate closely in such a way as to maximise the returns to each partner".*

may be extremely difficult to achieve. For the status of extended enterprise to be deserved, the members of an extended supply chain must identify, rationalise and then integrate their respective goals and activities. This is a difficult task in a stable environment but is even more complex in the increasingly competitive and dynamic manufacturing environment. At the current time and in the current climate the large primary company will generally be dominant as it uses it's central influence and power to pursue its individual goals (Wortmann, 1998). This could be described as a dominated supply chain rather than an extended enterprise.

3 An SME Network

With the above in mind it may be argued that most SMEs are potentially part of an extended enterprise structure of other (and often larger) principal enterprises. It may be that SMEs can benefit from an increased understanding of the opportunities and threats associated with such environments e.g. an ability to work effectively as part of a dominated supply chain, as well as an extended enterprise may provide the SME with a competitive advantage. Integration amongst SMEs appears to be one of important aspects of an extended enterprise.

Manufacturing enterprises, and in particular SMEs, which understand the requirements for effective contribution within an extended enterprise and have the organisational structure, systems and expertise to achieve it, may gain significant competitive advantage in the future.

4 Goal Integration

Miller et al. (1986) identified three types of integration, namely, *technical integration*, *procedural integration* and *goal integration*. The last one, according to Browne (1996), is the highest level of integration. However, an extensive search of the literature suggests that no work has been carried out with respect to the issue of goal integration and its implications for the extended enterprise.

From the above it appears that there is a need to identify the extent to which goal integration, or perhaps more appropriately, goal rationalisation (as an element of compromise between the conflicting goals of the constituent members of a supply chain) takes place in typical manufacturing organisations and to identify models and procedures for its improvement. Given the dynamic and often volatile nature of the modern manufacturing environment, such work must also take into account the increasing importance of agility (Preiss, 1997) with respect to the success of manufacturing enterprises.

5 Agility

Youssef (1992) stated that agile manufacturing, quick response and time to market are all interrelated. He also suggested that there are three pillars for achieving speed and agility, namely:

- (responsive) suppliers
- internal capabilities

- (principal) customers

Kidd (1994) argued that the structure of agile manufacturing should be supported by three primary resources:

- innovative management structures and organisation
- a skill base of knowledgeable and empowered people
- flexible and intelligent technologies

Some work had been done in the area of integration (Karwowski and Salvendy et al, 1994); (Parks et. al., 1997) and in agile manufacturing (Burgess, 1994); (De Vor et. al., 1997); (Gadient and Hines, 1997) but none has yet indicated a significant correlation between them. Yusuf (1996) examined the extension of MRPII with a focus primarily on the integration of the internal capabilities of the company but did not investigate the integration amongst a manufacturer's external capabilities, suppliers and customers, which he said can create the extended enterprise. However, his work has provided some useful background for this project.

Based on our preliminary investigation through distribution of questionnaire to more than 40 participating companies in Indonesia, there are evidence that amongst the companies involved there is evidence of:

- Technology transfer
- Distribution of capacity
- Sharing of product development tasks
- The use of Computer Integrated Manufacturing (CIM)
- Shared marketing strategies

The above mentioned characteristics could be justified as evidence of the extended supply chain, which in turn will lead to extended enterprise.

In an extended enterprise the resources of agility should also be extended. Information systems provide a highway to pass communication among participating enterprises very quickly. Busby and Fan argued that the extended enterprise is characterised by the information channels built between those participating in its activities (Busby and Fan 1993). Without such technology, managing an extended enterprise will become extremely difficult when the participating enterprises are spread around the world.

Language may become the first problem if one of the firms does not speak the same language. Another problem may be the culture barrier. Western culture is clearly different to, say, Japanese or Korean culture. This is shown by the Japanese company manufacturing products in Japan compared to Japanese company manufacturing products in UK for instance, had shown differences in productivity.

Pallot (1998) when discussing the concurrent enterprise argued that Information and Communication Technology (ICT) provides the opportunity to have faster, cheaper and more efficient interactive loops between trading partners. In order to succeed in an extended enterprise environment each participating firm should adapt to each other's culture. That is to integrate the cultural behaviour. In other words, goal integration should consist of information and culture integration to make an agile extended manufacturing enterprise work effectively. Hence there are 5 resources of

the extended enterprise namely, *Technology, Organisation, People, Information and Culture (TOPIC).*

6 Core Competence

Browne et al. (1995) identified 3 clusters of pressures in the manufacturing environment namely, globalisation, environmentally benign production and business and organisational structures. They also said that the basis of competition in the global markets is excellence in core competence. Core competence has also appeared to become a backbone of the extended enterprise.

This paper has now identified three factors that appear to have strong links with the extended enterprise concept. These factors are *agility, goal integration, and core competence.* We can now refer these three factors as the needs of extended enterprise. This needs can be drawn as each side of an isosceles-triangle (figure 5).

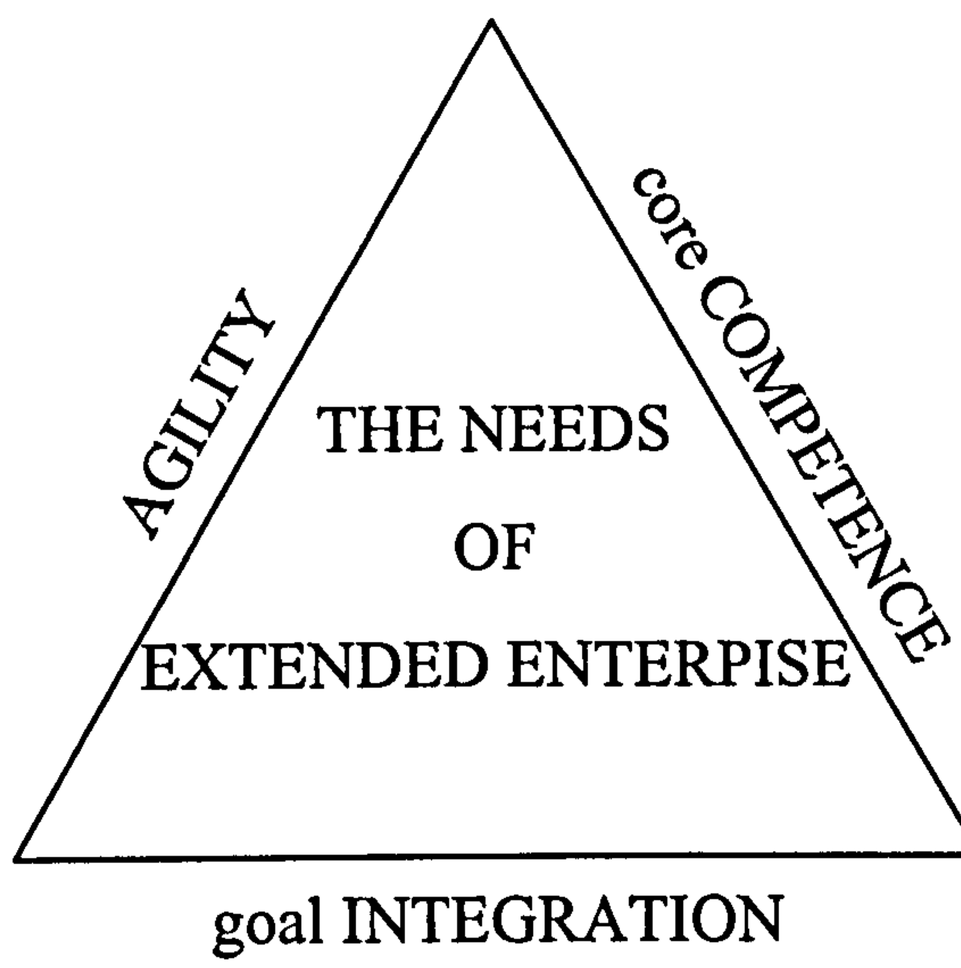

Figure 5: The isosceles triangle of the needs of the extended enterprise

7 Conclusion

The paper has discussed the important differences between the typical supply chain found operating today with its implicit dominance by one or more large companies who are attempting to optimize their position and profits, and the extended enterprise seeking to share both goals and profits. The extended manufacturing enterprise has been seen from a three dimensional perspective, *global supply chain network, small principal supply chain* and *large principal supply chain.* As such an extended enterprise concept with particular reference to SMEs has been described.

The role of the SME in the former model is one of extreme vulnerability. They are on the periphery of decision-making and often subject to unnecessary cash-flow problems. The collapse of a particular SME is rarely to the benefit of any supply chain. The second model is more robust and the place of the SME within it becomes tenable. As the goal changes from the optimization and performance of an individual

firm to that of the overall performance of the extended enterprise, then the role an importance of an individual SME becomes more explicit.

It is important to note that without each of three identified needs of the extended enterprise i.e. goal integration, agility and core competence being present, it is difficult for the extended enterprise concept to be implemented.

Acknowledgement

This work is sponsored by Engineering Education Development Project (EEDP) - The Department of Education & Culture of The Republic of Indonesia. The preliminary case study of this work was fully carried out in Indonesia. The authors wish to express an acknowledgement and gratitude to all companies in Indonesia which has participated as respondents to our questionnaire and case study.

References

Browne, J., P.J. Sackett, and J.C. Wortmann, "Future manufacturing systems-Towards the extended enterprise", Computers in Industry, Vol. 25 No.3, 1995, 235-254.

Browne, J, "Production Management Systems: An Integrated Perspective", Addison-Wesley, 1996.

Burgess, Thomas F., "Making The Leap To Agility: Defining and Achieving Agile Manufacturing through Business Process Redesign and Business Network Redesign", International Journal of Operations & Production Management (IJOPM) Vol.14 No. 11, 1994, 23-34.

Busby, J.S. and I.-S. Fan, "The extended manufacturing enterprise:its nature and its needs", International Journal of Technology Management, special issue on 'Manufacturing Technology:Diffusion, Implementation and Management', Vol. 8, Nos. 3/4/5, 1993, pp. 294-308.

Craven, Brian, "Lessons from retail", Manufacturing Engineer, February 1998, 40-42.

Childe, S.J., "The extended enterprise-a concept of co-operation", Production Planning & Control, 1998, Vol.9, NO.4, 320-327.

DeVor, Robert, Robert Grave, and John J. Mills, , "Agile Manufacturing Research: Accomplishments and Opportunities", IIE Transactions (29), 1997, 813-823.

Gadients, Anthony J., Lynwood E. Hines, John Welsh, , Andrew P. Schwalb, "Agility through Information Sharing: Result Achieved in a Production Setting", Concurrent Engineering: Research and Applications, Volume 5, Number 2, 1997, 101-111.

Jagdev, H.S. and J. Browne, "The extended enterprise-a context for manufacturing", Production Planning & Control, 1998, Vol. 9, NO.3, 216-229.

Karwowsky, W. G. Salvendy, R. Badham, et.al, Integrating People, Organisation, and Technology in Advanced Manufacturing: A Position Paper Based on the Joint View of Industrial Managers, Engineers, Consultants, and Researchers", The International Journal of Human Factors in Manufacturing, Vol. 4(1), 1994, 1-19.

Kidd, Paul T., "Agile Manufacturing: Forging New Frontiers", Addison-Wesley, 1994.

Lamey, Joanne, "Supply chain management, best practice and the impact of new partnerships", Financial Time management reports, London, FT Retail & Consumer Publishing, 1996.

Miller, J.G., S.R. Rosenthal, and T.E. Vollman, "Taking Stock of CIM", Manufacturing Roundtable Research Report Series, 1986.

O'Neill, Henrique and Peter Sackett, "The Extended Manufacturing Enterprise Paradigm", Management Decision, Vol. 32, No.8, 1994, pp. 42-49.

Parks, Charles M., David A. Koonce, Robert P. Judd, and Michael Johnson, "An Integrated Manufacturing Systems Design Environment", Computers Industrial Engineering Vol.33 no.1-2, 1997, 341-344.

Preiss, Kenneth, "The emergence of the interprise", Keynote lecture to the IFIP WG. 5.7 Working Conference ORGANIZING THE EXTENDED ENTERPRISE, Ascona, Switzerland, 15 - 18 September 1997.

5th International Conference on Concurrent Enterprising 15-17 March 1999, The Hague

Roberts, Irving, "BPR for SMEs", Manufacturing Engineer, 261-263, December 1997.

Weill, Marty, "The enterprise extended", Manufacturing Systems (special report), IBM Supplement - March 1998.

Wortmann, J.C., "Evolution of ERP Systems", Proceedings of The International Conference of The Manufacturing Value-Chain, August 98, pp. 11-23

Youssef, M.A., "Agile Manufacturing: A Necessary Condition For Competing In Global Markets", Industrial Engineering, December 1992, 18-20.

Yusuf, Yahaya Y., "The Extension of MRPII in Support of Integrated Manufacture", Ph.D. Thesis, University of Liverpool, 1996.

Proceedings of the 15th International Conference on Computer-Aided Production Engineering, CAPE'99
P.G. Maropoulos and J.A. McGeough (eds.). ©University of Durham School of Engineering, Publishers

EXTENDED CIM: FROM EXTENDED SUPPLY CHAIN TO EXTENDED ENTERPRISE

P.F. Kelly, D. Little and E.Y.T. Adesta
Manufacturing Systems Research Group
University of Huddersfield, England
e.adesta@hud.ac.uk

ABSTRACT

The competition in today's manufacturing business is no longer supplier against supplier but supply chain versus supply chain. The extended enterprise may be considered as a logical progression from the extended supply chain, which requires close collaboration of all participating enterprises. These independent enterprises should integrate their goals, in order to collaborate and maximise the profitability and long term security of the extended enterprise and hence their own.

A Computer Integrated Manufacturing (CIM) "wheel" has been developed by the Society of Manufacturing Engineers (SME) in 1985. This conceptual diagram lists 20 aspects of manufacturing and uses an Integrated Systems Architecture (ISA) as the hub of the wheel. However, the CIM wheel has not linked these aspects to the external capabilities of an enterprise. In other words, CIM is solely dedicated for integration inside an enterprise. An extended version of the CIM wheel is needed in order to include and co-ordinate these external capabilities.

Based on a simple model for the extended supply chain concept, an ongoing investigation is underway at The University of Huddersfield. Distribution of a questionnaire, followed by a series of semi-structured interviews with a range of appropriate companies in Indonesia and the UK is being carried out, in order to provide information concerning current practice and current attitudes towards extended enterprise. This paper discusses the current status of the work, with an emphasise on CIM implementation within supply chain networks.

KEYWORDS

Supply chain, CIM, Core competence, Goal Integration, Agility

INTRODUCTION

The background of this work is based on a preliminary investigation which has been carried out with a range of manufacturing companies in Indonesia, to detect the current practice and current attitudes towards extended enterprise.

The concept of the extended enterprise has been explained [1] by modelling manufacturing enterprises and classifying companies into four categories [2], i.e. micro (one small digit), small (one capital digit), medium (two capital digit), and large (three capital digit) enterprises within a global manufacturing universe as can be seen in figure 1 below.

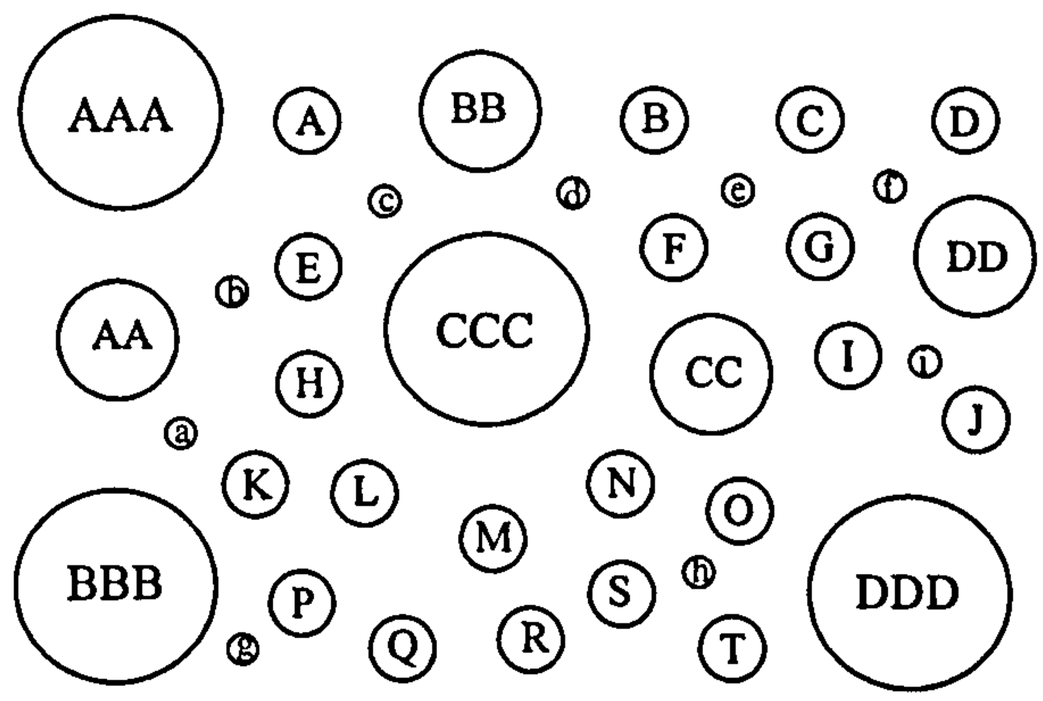

Figure 1. Global manufacturing universe (after Kelly et al, 1999)

Each of the enterprises shown in figure 1 may be considered to be a 'primary' enterprise i.e. one that exists to make profit from the sale of its associated goods and/or services and in doing so will make use of a chain of suppliers. It is said that in some cases these enterprises may have 're-engineered' their operations, in order to concentrate upon their excellence in 'core competence', as the basis of competition in global markets [3] and making effective use of a supply chain network or 'extended supply chain'.

The supply chain network or the extended supply chain has been defined by Kelly et al [1] as:

> *a network comprising a primary enterprise i.e. an enterprise with direct or primary contact with customers/clients, for the provision of products or services and the group of secondary enterprises which provide supporting materials, products and/or services.*

By mapping supplier-customer relationships amongst companies involved in the study, it has been shown that in global supply chain networks, the supplier-

customer relationship becomes very complicated, as shown in figure 2.

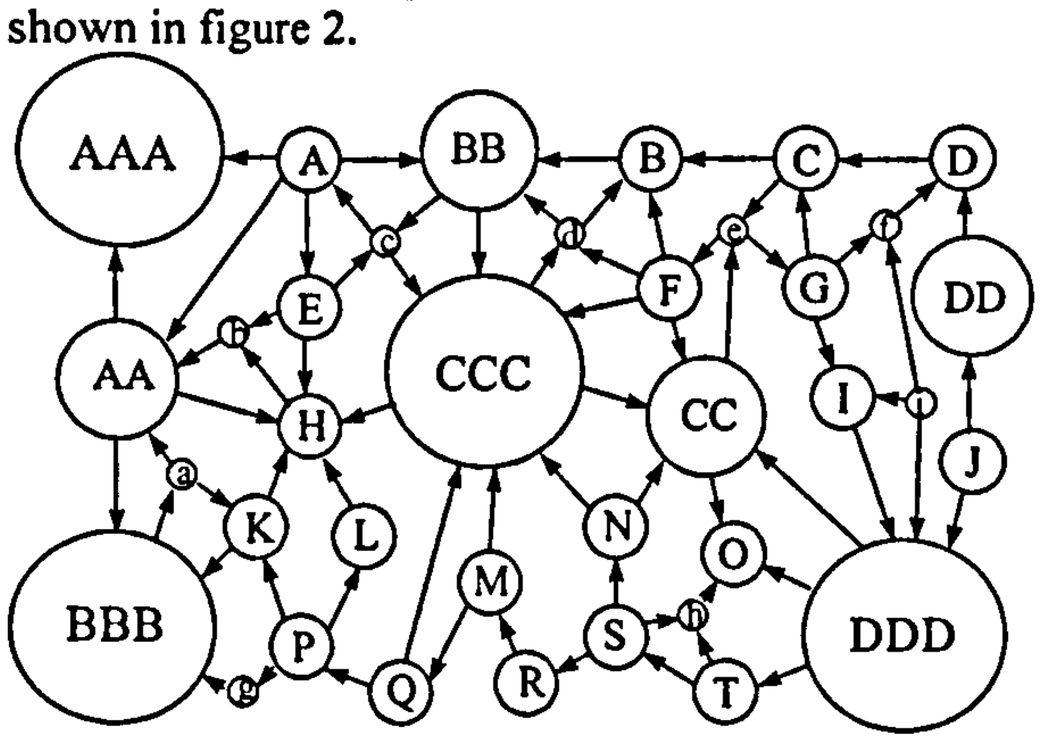

Figure 2. Global supply chain network or extended supply chain (after Kelly et al, 1999)

While the concept of a large enterprise as the centre or principal of an extended supply chain is widely accepted, in some cases the primary enterprise may be a 'small' or even a 'micro' organisation, with one or more of the secondary organisations being categorised as 'medium' or even 'large'. This particular situation is illustrated in figure 3, where company H is considered to be the principal company based on its core competence and direct links to the customer.

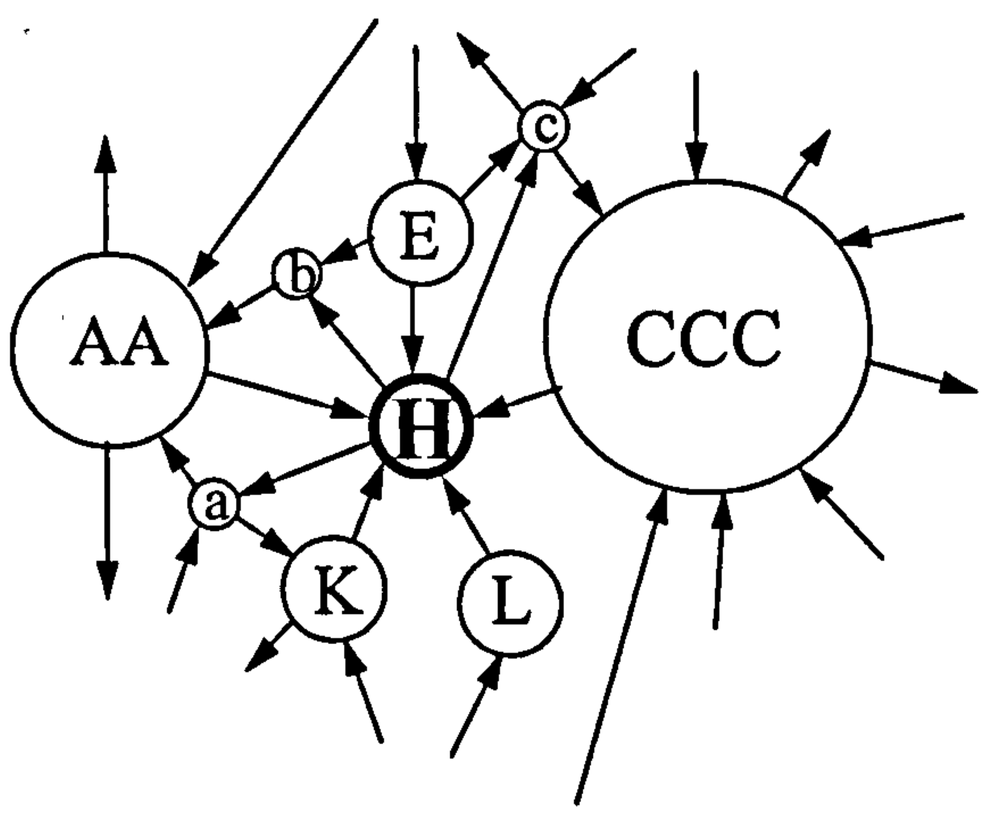

Figure 3. Supply chain with small company as the principal (after Kelly et al, 1999)

With the above in mind it may be argued that within an extended supply chain environment, every enterprise may be considered to be a primary enterprise, when viewed with itself as the focus. In an extended enterprise environment each of participating companies needs to have three factors present: *core competence*, *goal integration* and *agility*. Without these three factors being present, it is difficult for the extended enterprise concept to be implemented.

THE CRITERIA OF THE EXTENDED ENTERPRISE

A "triangle of needs" for the extended enterprise has been introduced by Kelly et al [1]. This triangle has core competence, goal integration and agility as its sides (Figure 4). As such in order to succeed, the extended enterprise should consist of these three factors which are equally importance.

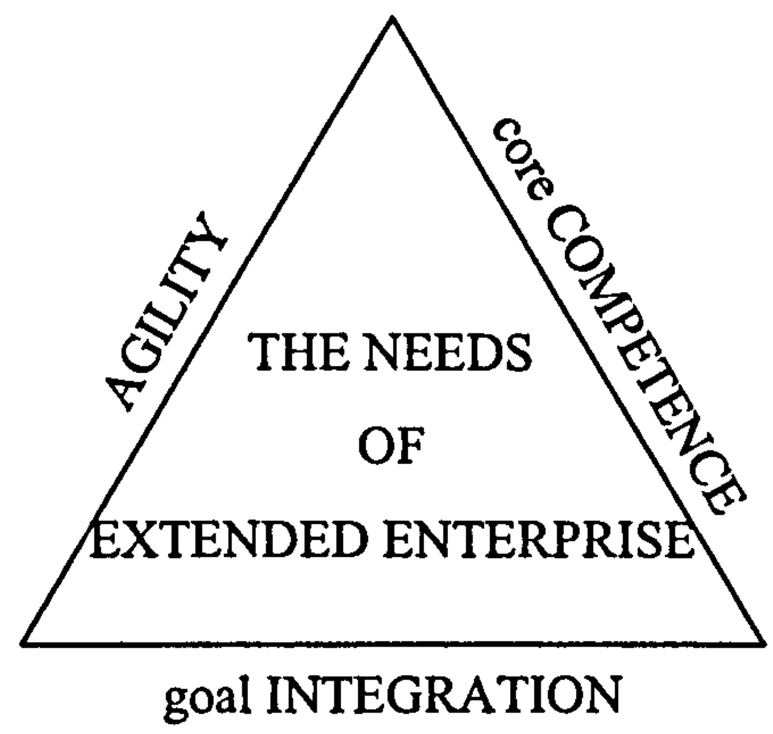

Figure 4. The "triangle of needs" for the extended enterprise (after Kelly et al, 1999)

It was found from the companies involved in this investigation, that most of their relationship with their partners is 'project based'. They select their partners based on their core competence through some kind of selection process. This selection process could be based on price, quality, reliability or after sales service/support. The relationship between partners within an extended supply chain appears to be very close, as such it could appear that they are 'virtually' in one company. However, each company's commitment to partnership is solely limited to the 'contractual' agreement settled in advance. As such each company involved in an extended enterprise will still remain 'independent'. Browne et al [4] argued that the extended enterprise allows a firm to take advantage of external competence and resources without owning them.

It appears that an extended enterprise may be described as a 'virtual' enterprise, comprising an number of 'independent' enterprises with their relationship being 'project' based. Hence there are three criteria for extended enterprise, namely: virtual (enterprise), independent (enterprises) and co-ordination by (project). These criteria are an extension from the previously mentioned triangle of needs for the extended enterprise (see figure 5).

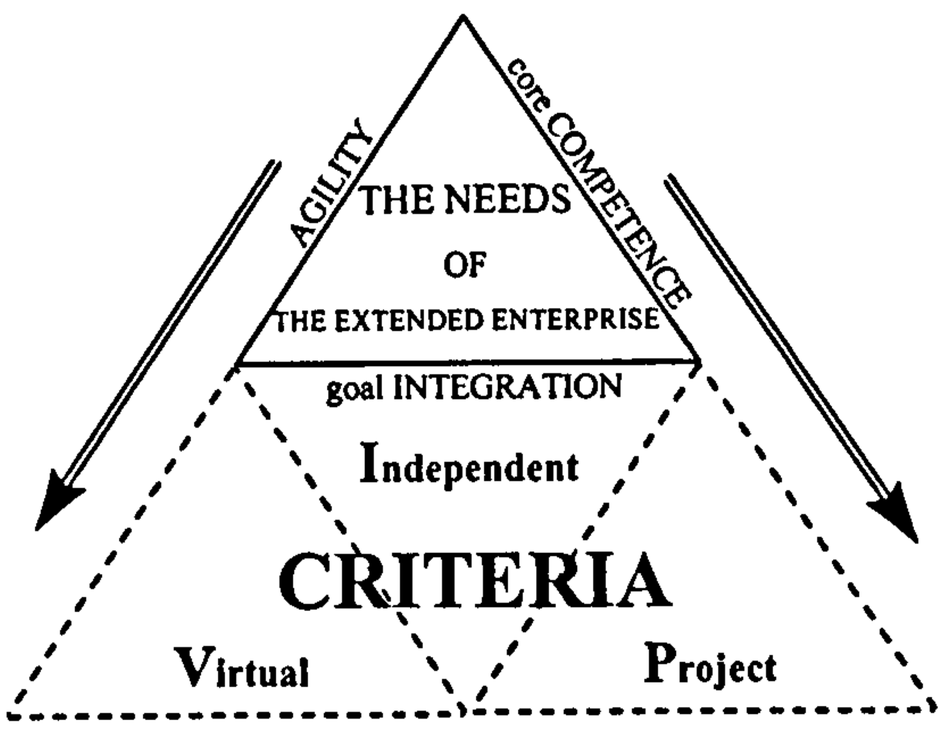

Figure 5. The criteria of the extended enterprise

THE RESOURCES OF THE EXTENDED ENTERPRISE

The next stage in defining a full perspective of the extended enterprise concept is to identify the resources necessary to implement the concept. Based on our preliminary investigation, conducted in Indonesia, there are five factors found to become potential resources (and hence indicators) for the extended enterprise.

Technology transfer has proved to be one of the co-ordinating bonds between participating companies. This is particularly true when they are dealing with high technology environments. The instinct of companies involved in high tech areas is to guard their technology. However, these companies need partners in order for them to fully explore their competitive and comparative advantage. As such working with partners and sharing technology or technology transfer amongst them becomes inevitable.

Organisational boundary appears to expand from traditional type of organisation. Within the participating companies we have witnessed companies deploying their staff in other organisations in support of mutually beneficial activity i.e. multi-organisational rather than simply multi disciplinary teams. As such the traditional organisational barriers have been lifted in order to achieve better and more effective function of the extended enterprise.

People are regarded as the most important and flexible asset of the enterprise. They will be well educated, highly trained and highly motivated. Within one of the companies failure of integration with respect to the integration of systems for CIM was clearly the result of a reluctance or an inability to accommodate change. The situation resulted from a performance reporting culture which encouraged the pursuit of local rather than global objectives.

Information systems and technology is regarded as the 'blood' of the extended enterprise. It will pass communication and information amongst participating companies from all over the world. The availability of such systems and technology as internet, intranet, and satellite communications will enable them to communicate and interact more effective and efficiently. Effective use of such systems is a clear resource /indicator.

Culture provides a significant contribution towards the extended enterprise concept. The culture of working in a single confined department is modified to a culture of 'open space', flexible communication and activity. This culture supports the shift from pursuit of local optimisation and local goals to global optimisation and the pursuit of mutually agreed "extended goals".
From these five resources/indicators of extended enterprise, a further five triangles maybe formed, as the base of a fully developed "triangle of extended enterprise", as shown in figure 6.

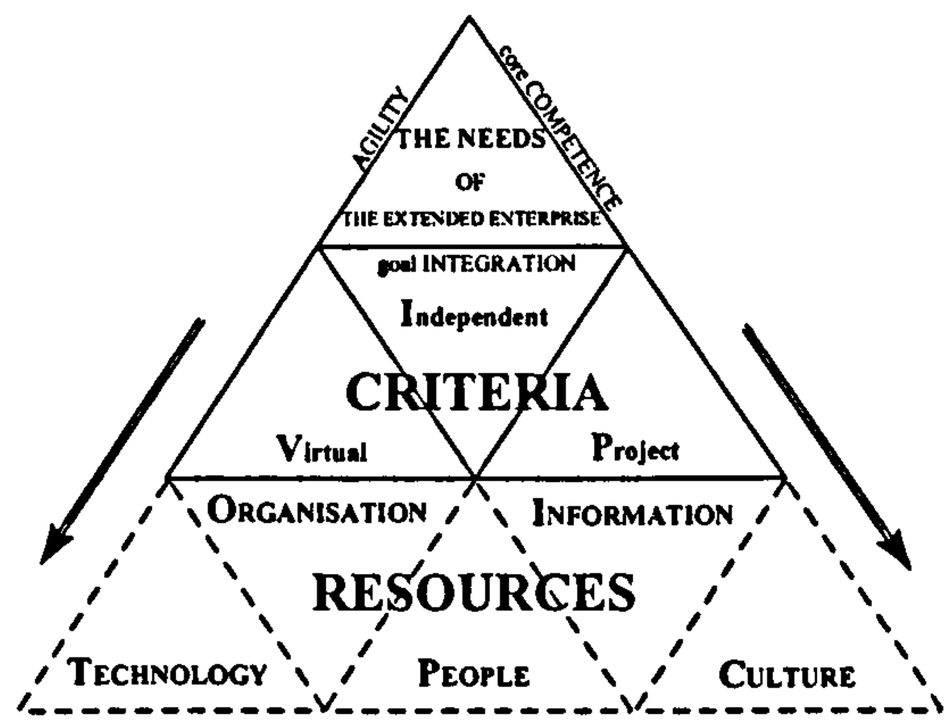

Figure 6. The "triangle of extended enterprise"

Computer Integrated Manufacturing (CIM) for the Extended Enterprise

The term CIM was introduced by Harrington [5], who argued for an integrated approach to the enterprise and against highly fragmented manufacturing operations that lead to localised optimisation. However, since then several CIM definition have appeared:
CIM according to The European Strategic Program for Research and Development in Information Technology (ESPRIT):,

> *Computer integrated system involving the overall and systematic computerisation of the manufacturing process. Such systems will integrate computer aided design, computer aided manufacture and computer aided engineering, testing , repair and assembly by means of a common database.*

The Computer and Automation Systems Association of the Society of Manufacturing Engineers (CASA/SME) defined CIM as:

> *The integration of the total manufacturing enterprise through the use of integrated systems and data communications coupled with new managerial philosophies that improve organisational and personnel efficiency.*

From these two definitions of CIM it may be concluded that CIM lies at the very heart of effective integration of enterprise activity. A CIM wheel has been developed, based on the CASA/SME CIM definition of 1985. This conceptual diagram lists 20 aspects of manufacturing and uses an Integrated Systems Architecture (ISA) as the hub of the wheel. The CIM wheel provides a major benefit in viewing the manufacturing system as a whole. However, the CIM wheel omits a very important link in integration, that is integration between the enterprise internal capabilities/systems with its suppliers and/or customers. Such integration can create the extended enterprise [6].

With this in mind an approach is being developed using the needs of the extended enterprise, namely core competence, goal integration and agility as the hub of an extended manufacturing wheel. It may be argued that to operate in an extended enterprise environment all participating enterprises should rationalise their needs/goals, otherwise it will be difficult to set up and operate an appropriate collaboration. Enterprise internal capabilities and systems are then built around these needs.

THE ENTERPRISE INTERNAL CAPABILITIES AND SYSTEMS

Having completed a preliminary investigation, it can be suggested that, in general, enterprise internal capabilities and systems may be broken down into five functional *spheres of activity: engineering, plant operations, production planning and control, distribution & customer support systems*, and *business management.*

Engineering, this function may be divided into several activities such as design, new product development, engineering change & release control, manufacturing engineering and industrial engineering. Engineering's role is to act as a source of ideas for the company. The design team needs to carry out design for the new product and subsequently model it, perform simulation and analysis on it whenever necessary. Research and development tasks may include investigating problems with existing product(s), testing new materials and new manufacturing technologies. Some work which has been carried out within the engineering function may result a patent for the company. This occasionally may cause a company to become reluctant in sharing its invention with others, consequently sharing knowledge and information at this level often fails. However, some of the case study companies are willing to share ideas and development projects in the interest of increased overall benefits. Usually their nature of business is highly specialised discrete manufacturing products, such as jigs & fixtures design, tooling and moulding.

Plant Operations, this function's main objective is to turn design and raw materials or inventories into saleable products. It operates and co-ordinates a wide range of activities such as incoming materials, storage and inventory, manufacturing processes, production planning and control, quality control and inspection, packing and shipping and plant service and maintenance. Depending on company size and nature of business, this function is usually lead by a Plant Manager. Integration with suppliers and/or customer in this level is possible by using Electronic Data Interchange (EDI), Distributed Numerical Control (DNC) program, and access to manufacturing database systems.

Production Planning & Control, this function will normally start with Master Production Scheduling (MPS) which is often driven by marketing, sales, or business management forecasting. Output of MPS will then be sent to material planning and resources planning functions. The output of this function will be used to plan capacity requirements. It is at this stage the plant manager knows his capacity requirements. The investigation has shown that there is a tendency for larger manufacturing companies to sub-contract their products on to smaller companies as well as moving extra capacity from well developed countries on to less developed or even developing countries, in order to take the advantage of lower manufacturing costs. During our case study we observed how this partnership has been operated. Technical expertise of a top European company and a highly regarded South East Asian company has been brought together. This partnership, which combined the two cultures has created a strong position to tackle the global market.

Distribution and Customer Support Systems, this function may have been seen as less significant than they really are. Large quantities of finish goods are usually stored in inventory or alternatively sent to customers' warehouses. Physical distribution is to link between manufacturing and retailers/customers, therefore for many companies distribution forms part of CIM [7]. As such this function can be extended to suppliers and/or customers by providing a common database systems to be used to monitor level of finish good inventory, allocating demands, release order and scheduled dispatching and shipments.

Business management, this function is usually to manage overall company activities. It means every other function will have to submit a report on budget and expenditure. As such there is a common need for financial information to be communicated between the business management function and all other functions within the company.

Business management function will usually also have the responsibility for billing, account payable and account receivable. It is from this function the business strategy will be set-up. During the case study it has been noticed that top management will be taking input from other function in order to decide a critical decision. However, it is also often the case where top management will just decide things based on company shareholders general meeting.

CONCLUSIONS

CIM has been regarded as the highest possible computer based integration within the internal capabilities and systems of a company. However, this integration must be expanded across participating enterprises within the supply chain networks or extended supply chain. As such it may be used to provide a Spine for implementation of the extended enterprise. In order to do so, an extended CIM wheel has been developed, based on the needs of the extended enterprise (core competence, goal integration, agility) as the hub of the wheel, using all available functions within internal capabilities and systems of an enterprise, by putting together all the resources of the extended enterprise i.e. (Technology, Organisation, People, Information & Communication Technology, and Culture).

With this in mind the extended CIM may be used to 'gear' up partners within the extended enterprise environment. There is currently an on-going investigation towards the system itself with a major European company with an SME UK based company joint with its South East Asia counterpart. The first stage of integration will emphasise the development of integrated systems for communication, including: internet and video conferencing.

The development to date may be summarised by reference to the extended CIM wheel for extended enterprise shown in figure 7.

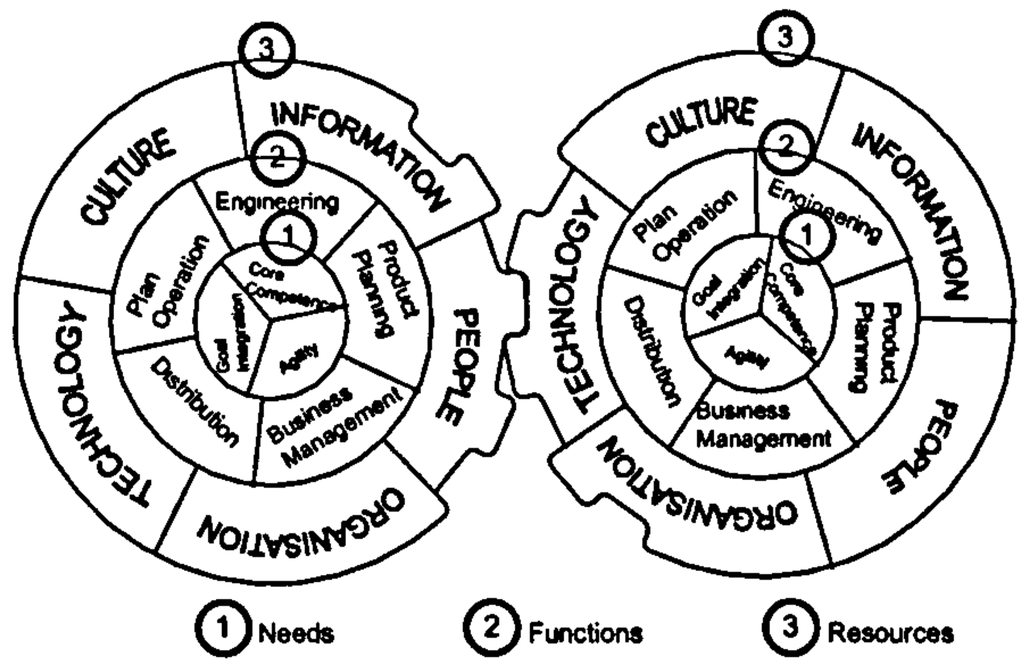

Figure 7. The extended CIM wheel for the extended enterprise

ACKNOWLEDGEMENT

This work is sponsored by the Engineering Education Development Project (EEDP) - The Ministry of Education & Culture of the Republic of Indonesia, in collaboration with the Manufacturing Systems Research Group (MSRG) of the Huddersfield University, UK. The preliminary case study had been carried out in Indonesia, with further investigation and case study, being carried out in the UK. Thanks are due to Mr. Alan Mason - Chief Executive of ALAN Group Ltd., Horsham, UK for providing relevant background information and case material.

REFERENCES

[1] P.F. Kelly, D. Little, E.Y.T. Adesta, A Three Dimensional Perspective on Extended Manufacturing Enterprise in: *Proceedings of the 5th International Conference on Concurrent Enterprising*, The Hague, The Netherlands, 15-17 March 1999.

[2] I. Roberts, BPR for SMEs, *Manufacturing Engineer*, 261-263, December 1997.

[3] J. Browne, P.J. Sacket, J.C. Wortmann, Future manufacturing systems - Towards the extended enterprise, *Computers in Industry*, 25, 235-254, 1995.

[4] J. Browne, J. Harhen, and J. Shivnan, Production Management Systems - An Integrated Perspective, Addison-Wesley, Harlow-England, 1996.

[5] J. Harrington, Computer Integrated Manufacturing, R.E. Kreiger, Huntington-New York, 1973.

[6] Y.Y. Yusuf, The Extension of MRPII in Support of Integrated Manufacture, Ph.D. Thesis, University of Liverpool, Liverpool, 1996.

[7] R. Hannam, Computer Integrated Manufacturing - from concepts to realisation, Addison-Wesley, Harlow-England, 1997.

BIOGRAPHY

Phil Kelly spent eighteen years in the steel industry and gained extensive experience in development engineering, manufacturing engineering and line management. Since joining the University of Huddersfield in 1982 he has maintained links with industry through Teaching Company Scheme (TCS) and consultancy activity. He is currently a Principal Lecturer in Manufacturing Systems at the University of Huddersfield with special interest in the areas of project management, manufacturing systems design and product costing. Dr. Kelly's current interests are associated with the provision of distributed management and control systems for the extended enterprise.

David Little worked in industry after graduating from Loughborough University with GEC, A. Reyrolle and Mollins, Ltd., where he started as a project engineer on system 24 (the world's first FMS) and ended up as senior manager in their Spares Division. He moved into higher education at Huddersfield Polytechnic Business School. Leaving to undertake research at Liverpool University, he became a senior lecturer and Sub-Dean in the Faculty of Engineering and returned to the University of Huddersfield as Professor of Manufacturing Systems in January 1996. He is a past-president of the Institute of Operations Management.

Erry Adesta gained his degree in Mechanical & Production Engineering from Huddersfield Polytechnic and an M.Sc in Integrated Manufacturing Systems from University of Birmingham. After several years of working in industry including work with PT IPTN an Indonesian Aircraft Company, in 1994 he becomes lecturer in the Department of Mechanical Engineering at Universitas Tarumanagara in Jakarta, Indonesia. He was appointed as Deputy Head of Mechanical Engineering in 1996. Erry is a Chartered Engineer (CEng), member of the Institution of Electrical Engineers (IEE)-Manufacturing Division, and the Institute of Operations Management (IOM) and is also senior member of the Society of Manufacturing Engineers (SrMSME), USA. He is currently registered for a Ph.D. with the University of Huddersfield.

TEXT BOUND INTO

THE SPINE

AN EXTENDED CIM MODEL FOR THE EXTENDED MANUFACTURING ENTERPRISE

P.F. Kelly[1], D. Little[1] and E.Y.T. Adesta[2]

1 - Mechanical Engineering & Manufacturing Systems Department, The University of Huddersfield, England

2 - Mechanical Engineering Department, Universitas Tarumanagara, Jakarta, Indonesia

Mechanical Engineering Department, Universitas Tarumanagara, Jakarta 11440, Indonesia
Tel: +62 21 567 2548 ; Fax: +62 21 566 3277 ; email: e.adesta@hud.ac.uk or eadesta@cbn.net.id

Key Words: CIM, Goal integration, Extended enterprise

ABSTRACT

A 'CIM (Computer Integrated Manufacturing) wheel' was developed by the Society of Manufacturing Engineers (SME) in 1985. This conceptual diagram lists 20 aspects of manufacturing, with ISA (Integrated Systems Architecture) as the hub of the wheel. It was then followed by the development of the "new manufacturing wheel" in 1993, that has also been developed by the SME and is now focused on customer. However, these 'wheels' do not link each of their aspects with the external capabilities of the enterprise; in other words, CIM is presented as being dedicated solely to internal integration of an enterprise. This paper addresses the issue and proposes a revised model of CIM.

1. INTRODUCTION

The implementation of Computer Integrated Manufacturing (CIM) may be regarded as one of the indicators towards the practice of extended supply chain, in addition to other characteristics such as *technology transfer, distribution of capacity, sharing of product development tasks* and *shared marketing strategies* [1]. Following the definition of the supply chain network or the extended supply chain [1,2], an extended enterprise for the purpose of this paper may be defined as:

> *a network of enterprise, incorporating goal integration amongst participating members, comprising a primary enterprise i.e. an enterprise with direct or primary contact with costumers/clients, for the provision of products or services and the group of secondary enterprises which provide supporting materials, products and/or services.*

An investigation towards implementation of CIM for extended enterprise environment is currently underway at the University of Huddersfield, UK, in collaboration with Universitas Tarumanagara, Jakarta - Indonesia, uses extended enterprise needs as the hub which is linked to five key functions: *engineering, production planning & control, plant operations, distribution & customer support systems and business management.* These functions using the resources: *technology, organisation, people, information and culture*, if meshed with those of a collaborating enterprises, can 'gear up' the manufacturing business process by providing a foundation for 'goal integration', amongst the participating members of an extended enterprise. However, in doing so there should be a framework for the participating enterprises to work with. The framework developed in this research was based on three elements of the extended enterprise, i.e. *needs, functions* and *resources*. This paper introduces and emphasises the issue of goal integration as the highest level of integration [3] and addresses the implications for communication at the CIM level.

2. THE CIM WHEEL - AN OVERVIEW

A CIM wheel based on the SME CIM definition of 1985 (see figure 1) has been developed. This wheel provides a major benefit in viewing the manufacturing system as a whole. It has also provided a major breakthrough of viewing manufacturing industry i.e. it introduces a boundary-free environment. However, the CIM wheel omits one very important link in integration, that is integration between the enterprise internal capabilities/systems with its suppliers and/or customers. Yusuf [4] suggested that such integration can create the extended enterprise.

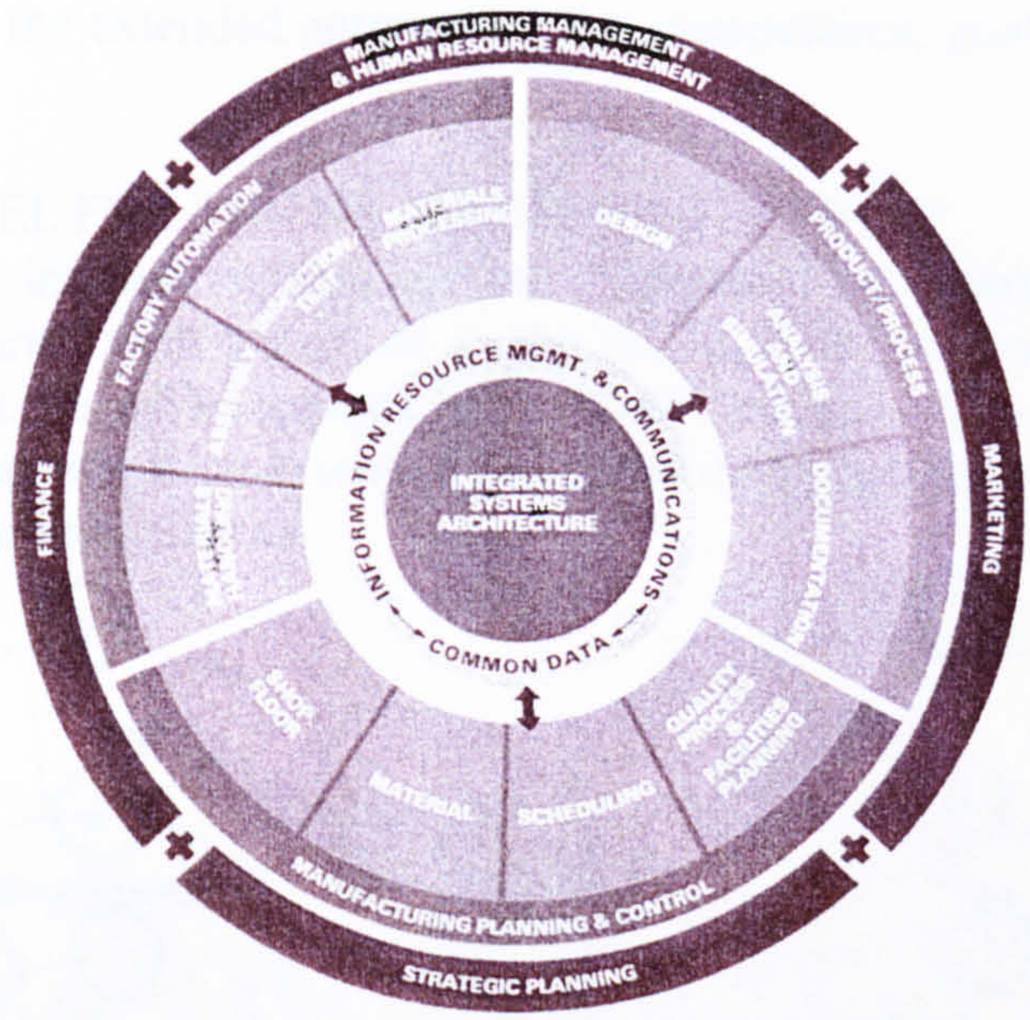

Figure 1. The Computer Integrated Manufacturing (CIM) Wheel
Copyright of the Society of Manufacturing Engineers (SME), 1985

The new manufacturing wheel that was also developed by the Society of Manufacturing Engineers (SME) in 1993 as shown in figure 2 is focused on the customer. It is divided into six levels: level 1 - Customer as the hub of the wheel, level 2 - Teamwork, People and Organisation, level 3 - Shared knowledge and Systems, level 4 - Customer support, Product/Process, and Manufacturing, level 5 - Resources and Responsibility, and level 6 - Manufacturing infrastructure.

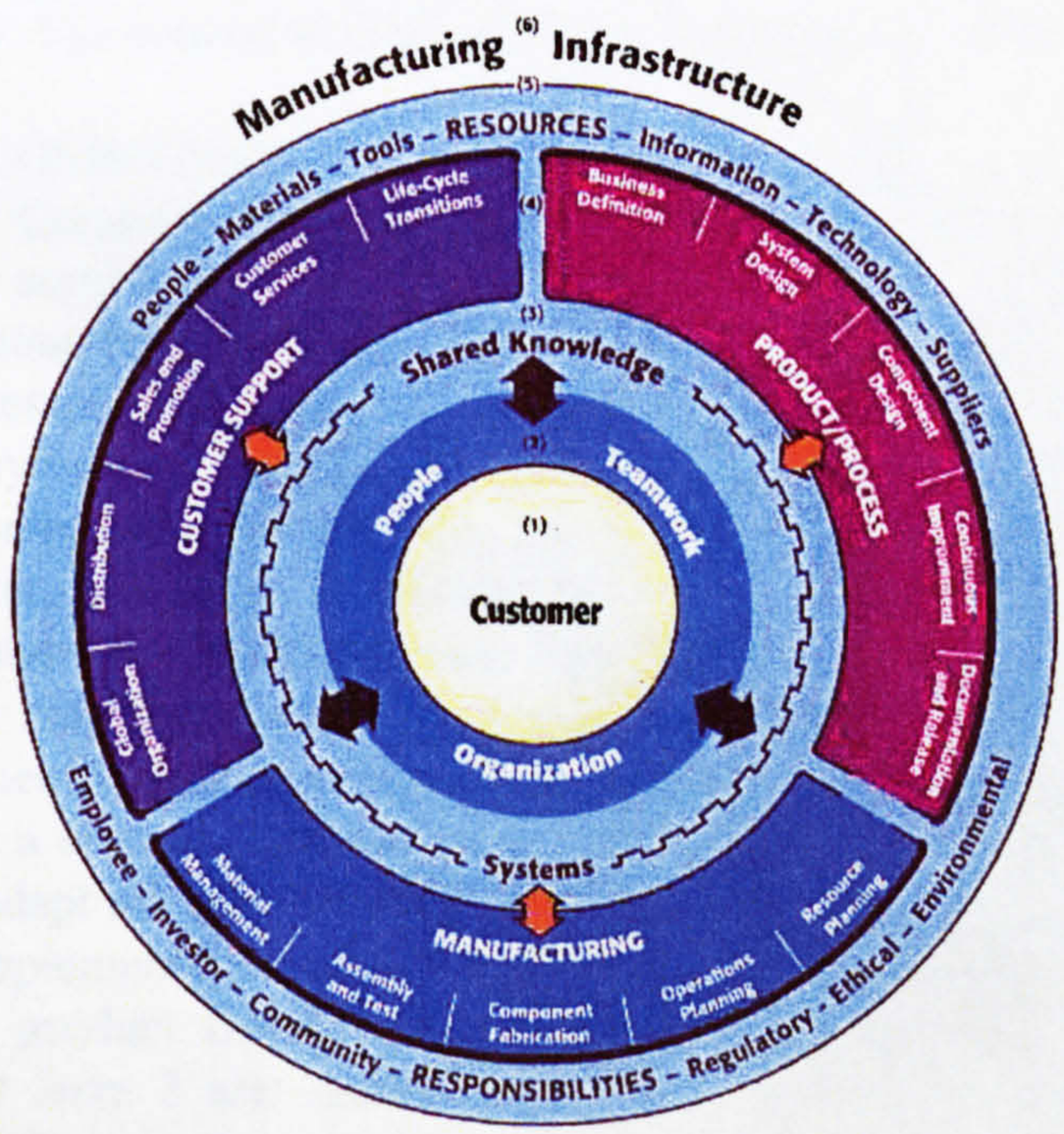

Figure 2. The New Manufacturing Enterprise Wheel
Copyright of CASA-the Society of Manufacturing Engineers (SME), 1993

Hannam argued that the features that commended this model to its originators were its relative simplicity, its generic characterisation of functional interactions, and the applicability of its processes across a variety of industries [5]. However, it may be argued that to operate in an extended enterprise environment all participating

enterprises should integrate/rationalise their needs/goals. To support this an extended CIM wheel has been developed [2], with the needs of the extended enterprise (core competence, goal integration, and agility) as the hub.

3. THE EXTENDED CIM WHEEL FOR THE EXTENDED ENTERPRISE

The functions within the internal capabilities and systems of an enterprise are put together with the resources of the extended enterprise with the needs as the hub to form an extended CIM wheel as shown in figure 3. It may be suggested that this wheel appears not to have the focus on the customer that one may expect. However, it may be suggested that within an extended enterprise every participating enterprise may see itself as customer or supplier in different circumstances.

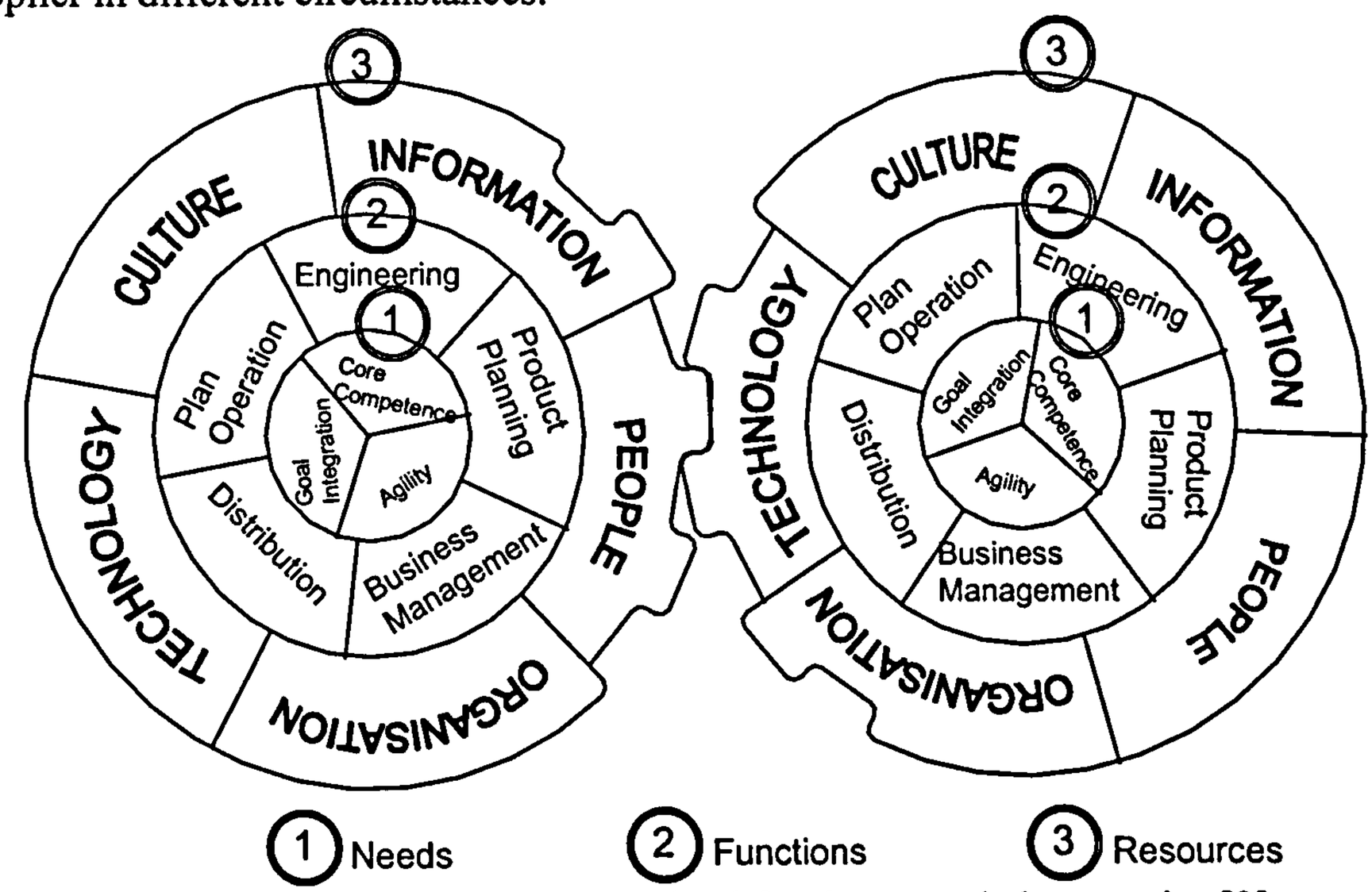

Figure 3. The Extended CIM wheel for the extended enterprise [2]

4. THE IMPLICATIONS OF COMMUNICATION AT THE CIM LEVEL

Information systems & Communication Technology (ICT) are regarded as the 'blood' of the extended enterprise [2]. Robertson [6] argued that the design, development and implementation of an Information Technology (IT) solution without fully considering how it helps the enterprise achieve its goals and how it impacts the organisation, processes, people and associated business performance measurements, will be sub-optimal. He then carried on saying that the IT tools were developed for use by technical experts for technical experts and are usually too complicated for the users to understand. It is therefore essential to view the CIM systems for the extended enterprise from the resources of the extended enterprise itself i.e. Technology, Organisation, People, Information & Communication and Culture, as shown in figure 4. The existence and effective use of such systems may therefore be regarded as one of the indicators of efficient and effective extended enterprise. It consequently appears obligatory for enterprises that will be participating in an extended enterprise environment to pay a special attention to this. In order to make effective and efficient use of ICT there is a need to adjust and adapt all the resources available within participating enterprises. During the case studies it was found that the implementation of ICT appears to be able to bridge the communications gap which in turn significantly reduces product development time scales. There are many options to bridging the communications gap, amongst them 3 are: *secure access to corporate intranets*, *utilising Video Conference (VC)* and *implementing Pro PDM (intralink).*

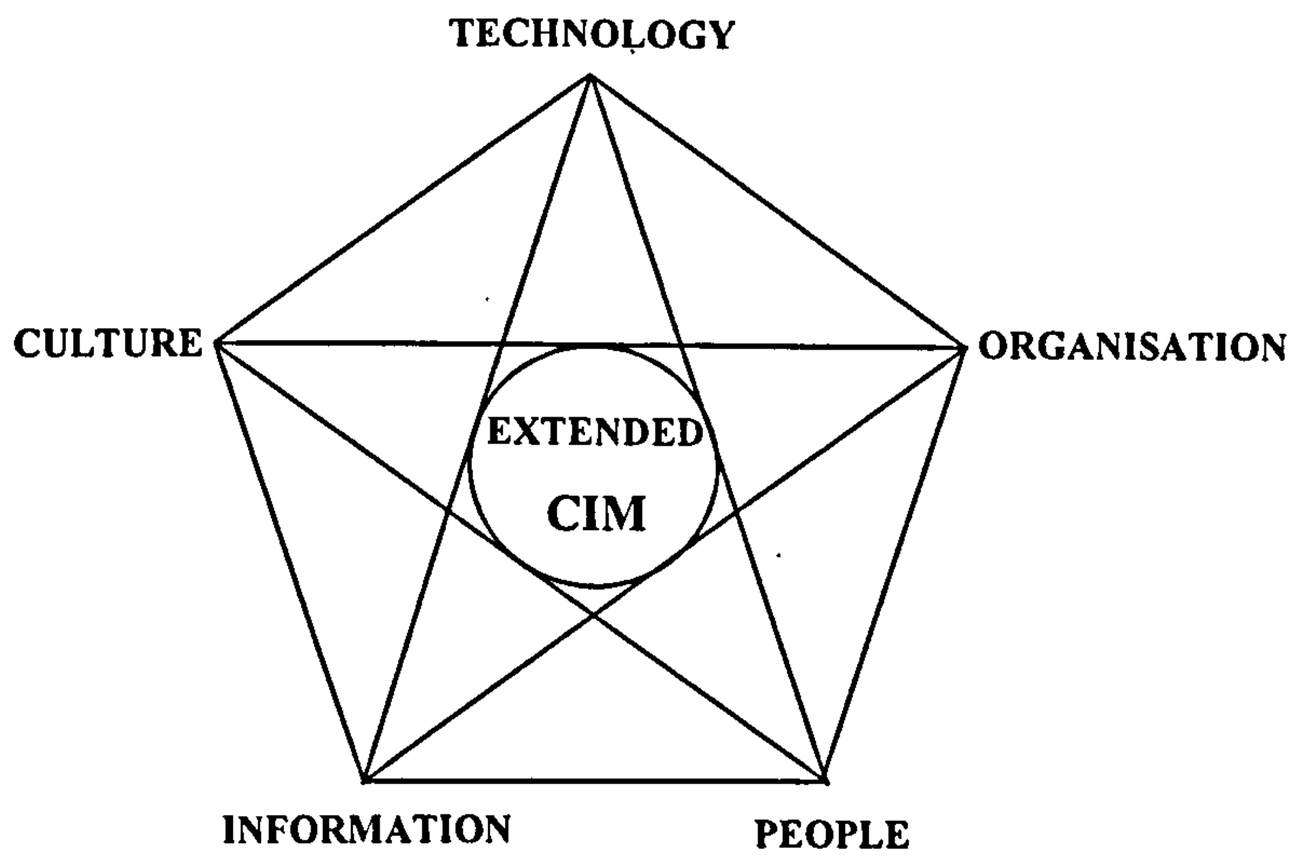

Figure 4. Extended CIM Within Extended Enterprise Resources Viewpoints

CONCLUSION

This paper has introduced the issue of goal integration as the highest level of integration and addressed the implications for communication at the CIM level for the extended manufacturing enterprise. It may be argued that while CIM is regarded as the ultimate point of integration within internal capabilities and systems of an enterprise, an extended CIM must integrate different functions within the extended enterprise. A system is being implemented at an SME enterprise based in UK to integrate with some major enterprises within Europe and South East Asia.

ACKNOWLEDGEMENTS

Thanks are due to Mr. Alan Mason - Chief Executive of ALAN Group Ltd., Horsham, UK for providing relevant background information and case material and also to Mr. John Hopkins of Northbay Ltd. for supporting us with IT framework.

REFERENCES

1. Kelly, P.F., Little, D and Adesta E.Y.T., A Three Dimensional Perspective on Extended Manufacturing Enterprise, Proceedings of 5th International Conference on Concurrent Enterprising, Den Haag 15-17 March 1999, pp61-68

2. Kelly, P.F., Little, D. and Adesta, E.Y.T., Extended CIM: From Extended Supply Chain to Extended Enterprise, Proceedings of 15th International Conference of Computer Aided Production Engineering, Durham 19-21 April 1999, pp643-648

3. Browne, J., Harhen, J., Shivnan, J., Production Management Systems - An Integrated Perspective, Addison-Wesley Publishing Company, England, 1996

4. Yusuf, The Extension of MRPII in Support of Integrated Manufacture, Ph.D. Thesis, University of Liverpool, Liverpool, 1996

5. Hannam, R, Computer Integrated Manufacturing - From concepts to realisation, Addison Wesley Longman, England, 1997

6. Robertson, T, How To Improve The success of Your IT Investments, Control. May, 1999, pp18-21