University of Huddersfield

## University of Huddersfield Repository

Fabricatore, Carlo

Gameplay and Game Mechanics: A Key to Quality in Videogames

**Original Citation**

Fabricatore, Carlo (2007) Gameplay and Game Mechanics: A Key to Quality in Videogames. In: ENLACES (MINEDUC Chile) -OECD Expert Meeting on Videogames and Education, 29-31 October, 2007, Santiago de Chile, Chile.

This version is available at http://eprints.hud.ac.uk/id/eprint/20927/

The University Repository is a digital collection of the research output of the University, available on Open Access. Copyright and Moral Rights for the items on this site are retained by the individual author and/or other copyright owners. Users may access full items free of charge; copies of full text items generally can be reproduced, displayed or performed and given to third parties in any format or medium for personal research or study, educational or not-for-profit purposes without prior permission or charge, provided:

- The authors, title and full bibliographic details is credited in any copy;
- A hyperlink and/or URL is included for the original metadata page; and
- The content is not changed in any way.

For more information, including our policy and submission procedure, please contact the Repository Team at: E.mailbox@hud.ac.uk.

http://eprints.hud.ac.uk/

# GAMEPLAY AND GAME MECHANICS DESIGN: A KEY TO QUALITY IN VIDEOGAMES

**CARLO FABRICATORE**

**Abstract**

What makes a good game? Marketing wisdom indicates that the success or failure of a product depends mainly on how well it satisfies customers' preferences, needs and expectations. Consequently, knowing the player and his/her preferences is crucial to design successful digital games. Hence, the really important question is: what do players expect from a good game?

When playing a game, players seek challenge, mastery and reward, all packed in entailing and motivating activities. From this stems the importance of gameplay as a crucial game design cornerstone, and game mechanics as tools that the player has to interact with in order to carry out gameplay activities.

In this paper we analyze the relevance of gameplay and game mechanics from a player-centered perspective, and provide insights and guidelines to improve game design in order to sustain and enhance players' motivation through gameplay.

---

**Carlo Fabricatore** is a computer scientist and game designer. He specializes in videogame development and the study of human-computer interactions in the area of digital games. He is the founder and CEO of *Initium Studios*, a company focused on development, consulting and training in the fields of interactive digital entertainment and cross-media.

# CONTENTS

**1. INTRODUCTION**
- 1.1 Quality and digital games: importance of the player and the play experience
- 1.2 The cornerstones of game design
- 1.3 The focus on gameplay

**2. GAMEPLAY**
- 2.1 What is “gameplay”? A player-centered perspective
- 2.2 Game mechanics: the tools for gameplay
- 2.3 Game mechanics, motivation and learning processes
- 2.4 Guidelines to sustain and enhance motivation in learning and using mechanics

**3. ARCHITECTING GAMEPLAY**
- 3.1 Core gameplay and core game mechanics
- 3.2 Core meta-gameplay
- 3.3 Satellite game mechanics
- 3.4 An architectural model for game mechanics
- 3.5 Peripheral gameplay
- 3.6 Guidelines for gameplay design

**7. CONCLUSIONS**

# 1. INTRODUCTION

## 1.1 Quality and digital games: importance of the player and the play experience

What determines the quality of a digital game? According to traditional marketing literature, a good product is one that satisfies customers' needs, preferences and expectations (Kotler, 1993). In the case of videogames, this leads to the central importance of players' preferences, which are what a game should satisfy. Then, what do players want in a game?

Relevant players' opinions and judgments always originate from the play experience. Regardless of specific game contents, while playing a game, the player interacts with a virtual universe, which receives player's inputs and responds by changing its status. Information regarding the outcome of the interaction is then conveyed to player, and eventually gathered and used by him/her to decide what to do next, as shown in figure 1.1 (Fabricatore, 1999). This cycle is repeated iteratively, until the player wins or loses the game, or simply decides to suspend temporarily his/her play session.

Figure 1.1. **Interactive cycle in the play experience**

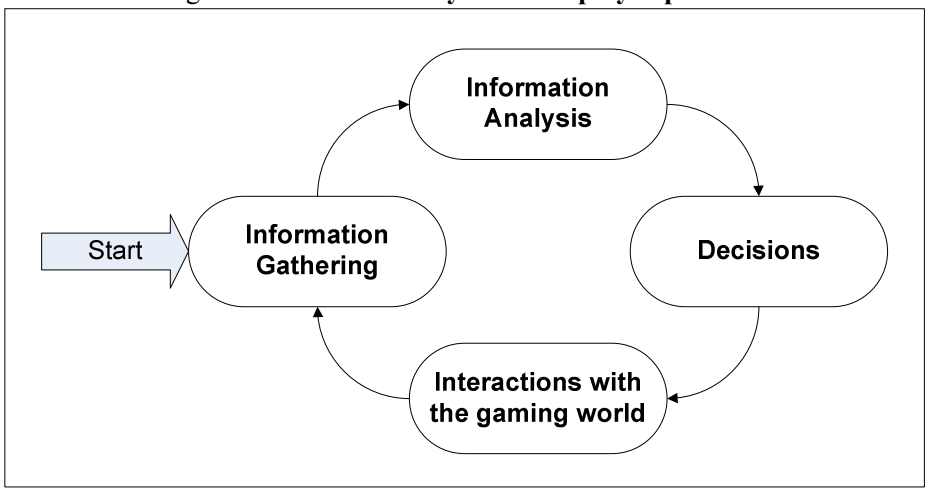


As cold as it may sound, this essential interactive cycle is (or should be) the source of fun. Or, if game designers fail, it will be the source of players' disappointment, frustration and negative judgments. Then, what are the determinants of quality involved in the cycle?

## 1.2 The cornerstones of game design

The play experience interactive cycle is centered on a decision-making process that relies on the information conveyed to the player. Information is transmitted through visual (graphics and text), aural and even tactile means (in case the game relies on force-feedback interface devices). This means can be properties of contextual game objects (*i.e.* elements perceived by the player as belonging to the virtual world), or explicit interfaces (*e.g.* graphic user interface components). (Fabricatore, 1999).

Information managed by the player during the interactive cycle can be divided into two categories: functional and aesthetic. Functional information allows the player to undertake the activities he/she is supposed to carried out in order to win the game. Aesthetic information defines most aspects of the context in which the game takes place, and is manly aimed at rendering an atmosphere capable of drawing and maintaining players' attention on an emotive basis, making them feel part of an entailing virtual world (Fabricatore, Nussbaum and Rosas, 2002).

When asked to analyze a game, players usually focus their attention on three key elements that can safely be considered the key determinants of the quality of a game (Fabricatore, 1999; Fabricatore, Nussbaum and Rosas, 2002):

- the context of the game;
- the activities that must be carried out in order to win the game;
- how well the game allows understanding what must be done, and to actually accomplish it.

The context of the game encompasses the storyline, the setting of the game (*i.e.* the backdrop for the storyline) and the goals. Thus, the context has to do mainly with aesthetic information, although the goals have certainly a crucial functional importance, and the very same setting and storyline could condition players' activities significantly, for the sake of realism.

We'll refer to the set of activities that can be undertaken by the player as the "gameplay" of the game (Bates, 2001; Lewinski, 1999; Rouse, 2001), leaving to the reminder of this paper a more detailed analysis regarding this topic. Functional information is clearly crucial to gameplay, since without it would be impossible for the player to make any decision at all.

Playability is the instantiation of the general concept of usability when applied to videogames, and it is determined by the possibility of understanding performing the activities required to win the game (Fabricatore, 1999; Fabricatore, Nussbaum and Rosas, 2002).

When analyzing and judging a game, players focus on gameplay, playability and the game's context (Fabricatore, 1999). Therefore these three elements must be the main foci of attention for game designers, and can be safely considered true cornerstones of game design.

### 1.3 The focus on gameplay

Are all the cornerstones equally important? Not really. Poor playability undermines players' ability of understanding the game-play and/or controlling it, thus seriously affecting the play experience. Hence poor playability means poor game, regardless of other aspects (Fabricatore, 1999). However, it is not playability that catches players' attention at first.

When asked to describe and judge a videogame, sometimes players analyze "what the game is about", thus talking about the game's context. In these cases, they usually focus on focusing especially on "what you have to do", *i.e.* the goals of the game, thus display more interest for functional aspects than for aesthetic aspects of the context.

However, more often than not the focus of players' analysis is set on the "what you can do" factor, *i.e.* the gameplay of the game. In many cases players neglect the context and even the very same goals of the game, to focus on the gameplay activities that may be carried out in order to win. Hence, gameplay is the primary focus of players' attention when it comes to judging a game. Even more, according to players' opinions, flaws in functional elements of a game cannot be balanced by any non-functional aspect of the design, since a very good game context cannot sustain motivation if gameplay activities are ill-designed (Fabricatore, 1999).

All this stresses the relevance of gameplay, leading us to consider it the most important game design cornerstone, focusing the reminder of this paper on it.

## 2. GAMEPLAY

### 2.1 What is "gameplay"? A player-centered perspective

All players and every game designer talk about gameplay, which is *per se* evidence of the importance of such a concept. However, literature proposes very few hints of formal, player-centered definitions.

A number of sources deal with gameplay, ranging from those who talk extensively about gameplay without defining it (Pedersen, 2003), to those who end up with the conclusion that gameplay is a synergy emerging from the interaction of certain elements included in the game, posing that it could be defined, in a player-independent manner, as "one or more casually linked

series of challenges in a simulated environment" (Rollings and Adams, 2003). In between, there are those who hint at player-centered definitions, usually talking about what players are allowed to do in the game, and how the game is played (Bates, 2001; Lewinski, 1999; Rouse, 2001).

There is probably no universally accepted definition of gameplay. However, our past research revealed that players focus on gameplay as a key element to determine the quality of a digital game (Fabricatore, 1999; Fabricatore, Nussbaum and Rosas, 2002). So, what is gameplay, according to players?

Gamers do have a well-defined implicit notion of what gameplay is, and, when talking about gameplay and their play experiences, they always refer to what can be done in the game, focusing on:

- what the player can do;
- what other entities can do, in response to player's actions (i.e. how the game responds to player's decisions).

Gamers are sometimes interested also in what happen in the virtual world regardless of their own decisions (*i.e.* the liveliness of the world), although this doesn't emerge as a relevant focal point in players' comments.

Hence, a player-centered approach can lead to define gameplay as the set of activities that can be performed by the player during the ludic experience, and by other entities belonging to the virtual world, as a response to player's actions and/or as autonomous courses of action that contribute to the liveliness of the virtual world.

### 2.2 Game mechanics: the tools for gameplay

"Interactivity" and "activity" are two key concepts underlying the former definition of gameplay. But, how do players interact with the game? In order to undertake any activity at all, players have to interact with toys. Any ludic activity involves the interaction with concrete or abstract objects (Bruner, 1972). Such objects are also commonly referred to as "toys" (Crawford, 1984), and their manipulation requires a level of proficiency achieved through a learning process. The starting point of the process is the exploration of the characteristics of the toys (Bruner, 1972), which are used in the game only when the player feels to have understood their properties (Hutt, 1966). The use of the toys (both in terms of modes and purposes) and their relationships are regulated by rules, which organize a set of ludic activities and turns it into a complete and coherent game (Bruner and Sherwood, 1976). Some of these toys are called "game mechanics" in the game design jargon. So, do players talk about game mechanics? When? How?

Players do talk about game mechanics (even though not always using such name), when deepening their analysis regarding the quality of the gameplay. In fact, right after commenting the overall quality of the gameplay, players tend to focus on the elements they have to deal with in order for "things to happen" in the virtual world. These are perceived as mechanisms, "black boxes" which may or may not be visible, but are nevertheless there to allow playing the game. Players understand that such black boxes are capable of receiving inputs and react producing outputs, leading to a mere change in the status of the black box, and/or to new interactions with other black boxes, like a chain reaction (see figure 2.1).

Figure 2.1. **Player-centered model of a game mechanics**

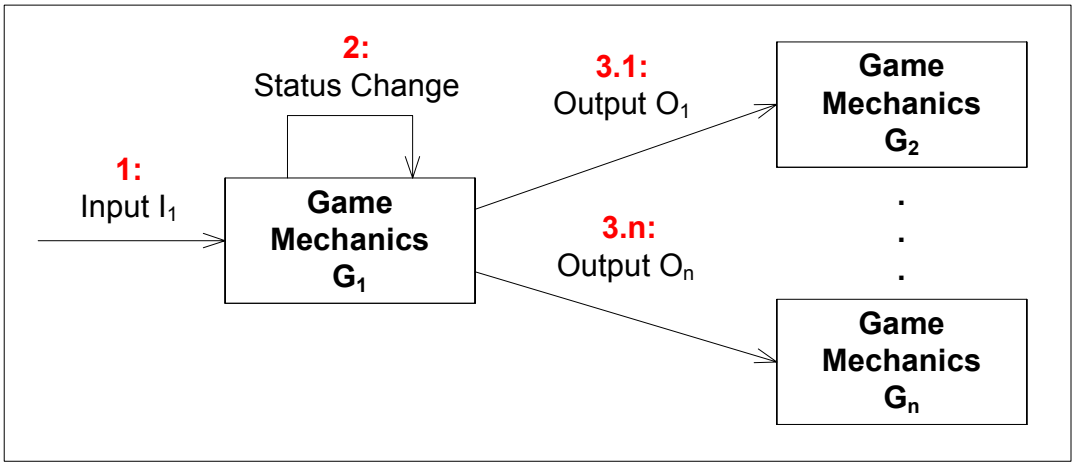


Hence, a player-centered perspective can lead to defining game mechanics as a proper tools for gameplay, atomic rule-based interactive subsystems capable of receiving an input and reacting by producing an output. Such output translates into a state change of the mechanics itself and/or into the triggering of new interactions with other game mechanics. A given game mechanics might be capable of receiving different inputs and reacting consequently. In terms of gameplay, this means to the player that the mechanics has features that allow triggering different interactions with it .

To understand all this through a concrete example, let's consider the case of a locked door connected to an alarm system. Assume that the player is required to unlock the door using a lock pick, and that if he/she doesn't disconnect the alarm, any lock picking attempt will activate it. A comprehensive schematic of the door mechanics can be formulated through the use of an UML finite-state machine diagram (Fowler, 2003), as shown in figure 2.2.

Figure 2.2. **Example of representation of a game mechanics as a finite state machine**

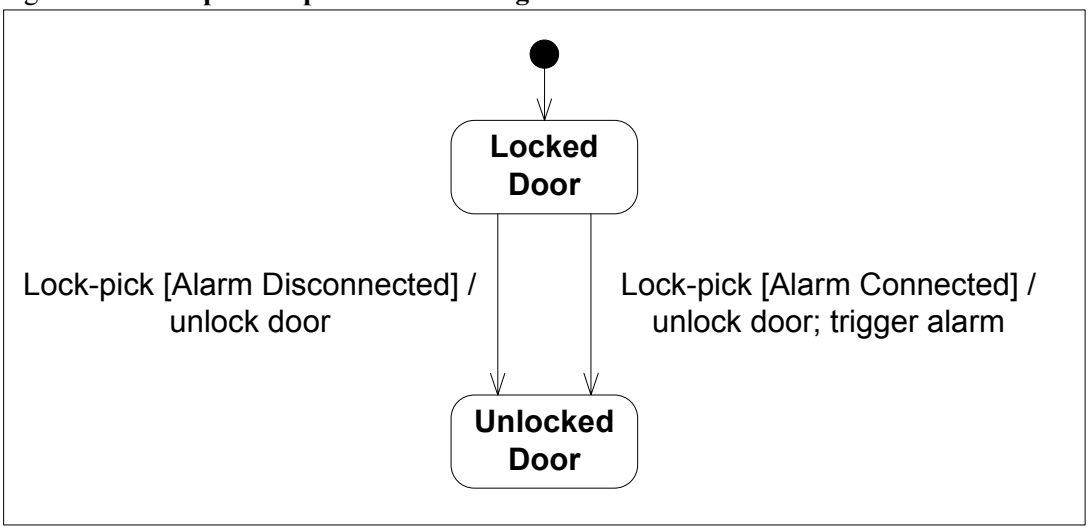


The workings of the system involves two game mechanics (the door and the alarm system), and the interactivity, in the case in which the alarm is connected, can be represented by using UML communication diagrams (Fowler, 2003), as follows.

Figure 2.3. **Example of interaction amongst game mechanics**

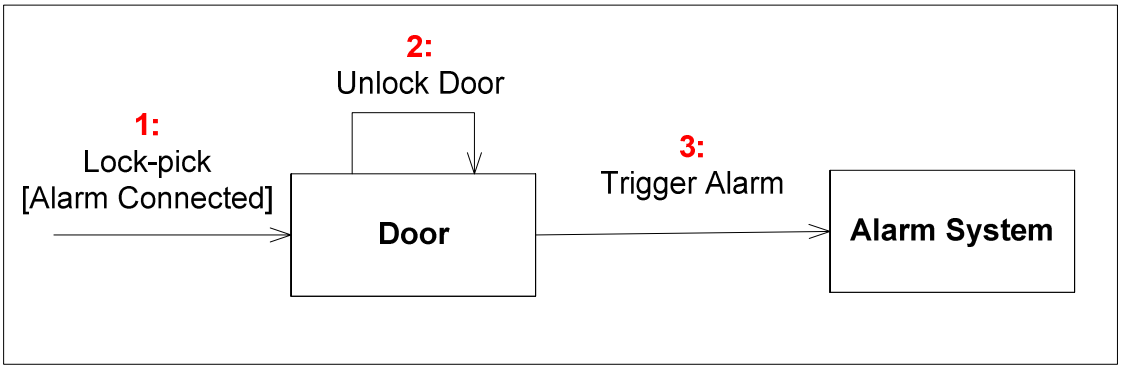


**2.3 Game mechanics, motivation and learning processes**

This far it is more than clear the functional importance of game mechanics. But, where does the fun come from? What make players like or dislike a game mechanics?

To start with, every game mechanics is characterized by its semantics, which will inevitably determine a first-impact appeal, making the player like or dislike it. In other words, some persons, due to their cognitive backgrounds, might be attracted by the idea of playing with a ball as soon as they see one, and others might not. Game designers can do very little about it, besides choosing mechanics whose semantics seem to be appealing to the target players, and ensuring that they are coherent with the context and the goals of the game.

That said, there are indeed factors that players focus on when judging whether a mechanics is "good" or not. When playing a game, players want to be challenged, control what surround them, develop a sense of mastership and achievement, and be rewarded consequently (Crawford, 2003; Malone, 1981a; Malone, 1981b; Malone and Lepper, 1987; Rouse, 2001; Rollings and Adas, 2003). As for game mechanics, challenge and reward come from three mechanics-related activities:

- learning the mechanics;
- using the mechanics as a tool for gameplay in ordinary situations;
- using the mechanics as a tool for gameplay in extra-ordinary situations, in presence of external factors that may alter the ordinary working of the mechanics.

The first activity presents to the player a challenge intrinsic to the mechanics itself. In fact, the player is required to explore and understand the inner workings of the mechanics, in order to control its features at will.

The second activity presents to the player an extrinsic challenge, since he must succeed in deciding, based on external environmental conditions, what standard features of the mechanics to use, and when and how to use them in order to achieve a given goal. In this case, once the decision is made, the mechanics is used in a standard way, and no new learning is required.

The third activity presents to the player a rather more complex extrinsic challenge. In order to achieve a given goal, the player is required to use the mechanics in a context in which external factors may alter its workings. In this case, not only the player will have to decide what features to use, when and how, but also understand how the external conditions influence the mechanics, and how to eventually exploit them to enhance it. All this requires new learning.

To better understand this, let's consider a concrete example. In a game like Quake®[1], one of the most important game mechanics is the locomotion system that is used by the player to control the motion of the player-token. Such system gathers player's inputs, and moves the player-token according to them and to other environmental conditions. One of the features of Quake's locomotion system is the "jump" movement. The system allows the player to make the player-token jump by simply pressing a key. If the player-token is not already moving when the jump command is issued, then the outcome of the interaction will be a vertical jump. If the player-token

is walking when the jump command is issued, then the interaction will result in a forward-jump. If the player-token is running when the jump is issued, then the result of the interaction will be a long forward-jump, in the direction of the run. The height of a vertical-jump is greater than the height of a forward-jump, which in turn is greater than the height of the long forward-jump. Such rules lead to the partial representation of Quake's locomotion system proposed in figure 2.4.

Figure 2.4. **Partial representation of Quake locomotion system**

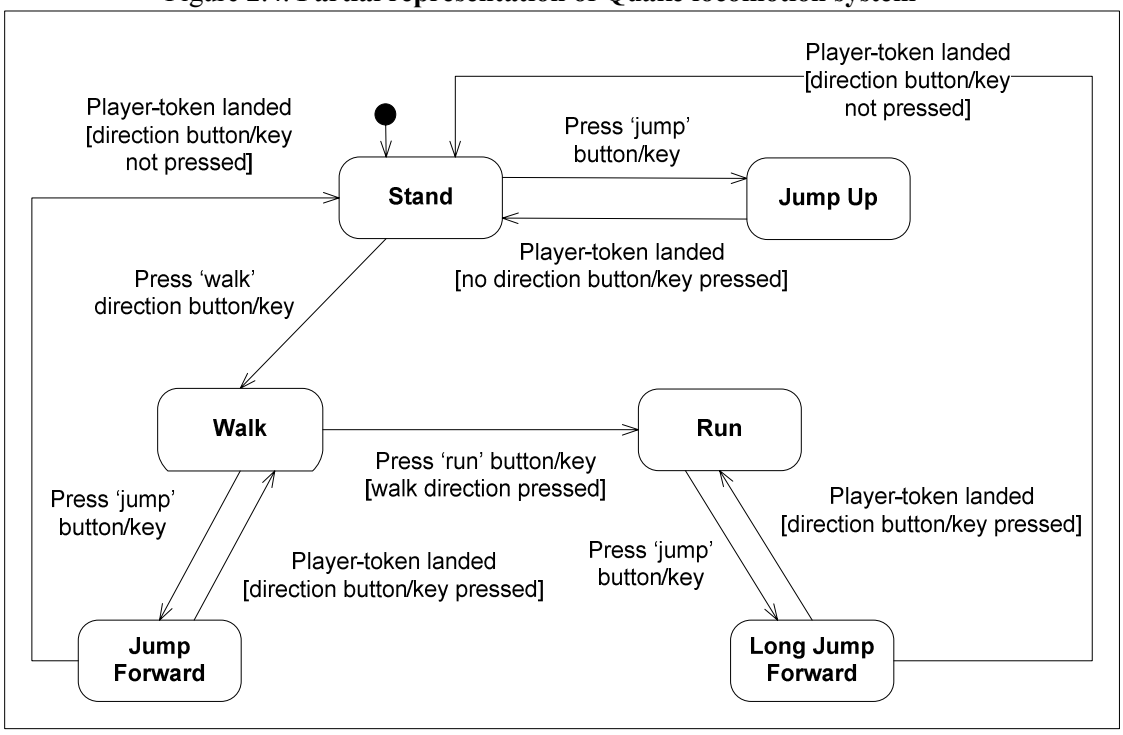


In order to control the "jump" feature of the locomotion game mechanics, the player will have to understand and learn all the aforementioned rules. This learning process will eventually lead to the mastery of three instances of the jump feature:

- vertical-jump;
- forward-jump;
- long forward-jump.

Learning how to jump is certainly challenging, and can be very rewarding if enough feedback is provided to the player, indicating his progress in the learning process (Cook, 2006; Crawford, 2003). However, this process can hardly justify by itself the inclusion of a specific game mechanics. In fact, after the mastery has been completed, the player normally loses interest in the mechanics (Berlyne, 1950). This is what Cook (2006) calls "burnout", defining it as a "state of completed learning, where the player finally figures out that a particular action no longer yields meaningful results".

Burnout must be avoided, and the simplest way of avoiding it is putting the player in condition so he can use game mechanics as tools to achieve meaningful results as soon as mechanics have been learned. As an example, let's consider Quake once again. Quake's gameplay is all about fast-paced combats, thus being mostly centered on shooting and locomotion activities. The jump feature of the locomotion mechanics can be used to avoid opponents and their projectiles. Such activity only requires the player to choose when to jump. Nothing else alters the ordinary working of the jump mechanics, and, therefore, no further learning is required

to use it as a tool in ordinary situations. However, the player achieves meaningful results through ordinary jumping, thus sustaining the interest and motivation in the standard jump mechanics. But that's not all.

In Quake there is a physics system that simulates, among other things, impulse and momentum, which can affect the outcome of a jump. Even without having any formal notion of momentum and impulse, the player might imagine that the height of a jump can be enhanced through an external impulse, like a sort of catapult. Furthermore, he might discover (even accidentally) that such impulse can come from an explosion, triggered below the player-token right after it takes off in a jump (see figure 2.5).

Figure 2.5. **Enhancement of a jump through an explosion**

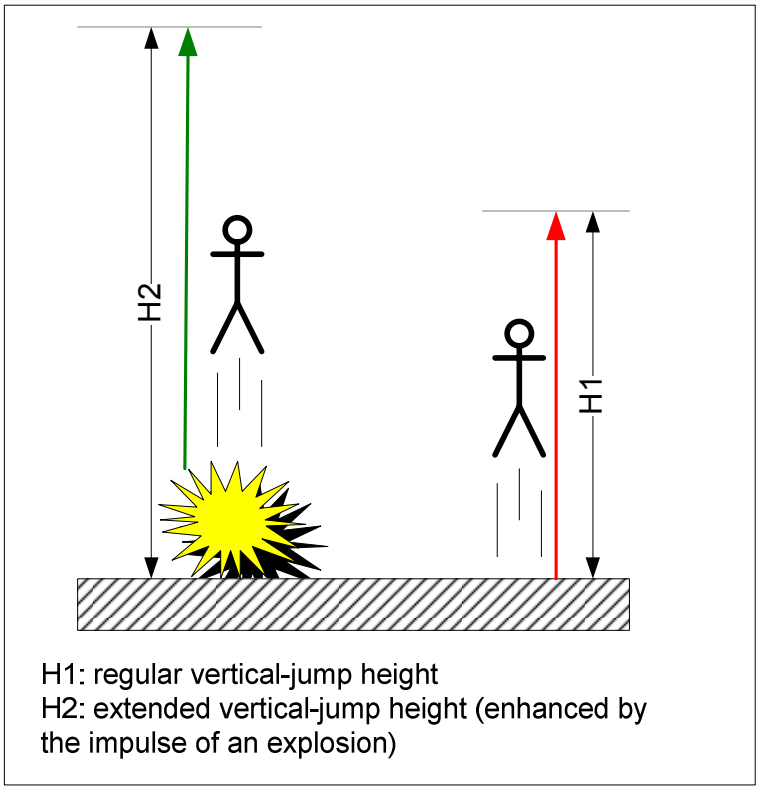


Such discovery could lead to the third game mechanics-related activity: using a mechanics as a tool for gameplay in extra-ordinary situations, exploiting external factors that can modify the outcomes of the mechanics. In our example, the player could discover that shooting a rocket on the ground right after taking off in a jump will make the player-token jump higher. This new outcome could be used to reach spots inaccessible through standard jumps (see figure 2.6). New learning is required to figure out how to use an external mechanics (the rocket launcher) to enhance the jump, but the payoff can be well worth it, thus enhancing the interest in the jump mechanics.

Figure 2.6. **Use of an enhanced jump to reach inaccessible spots**

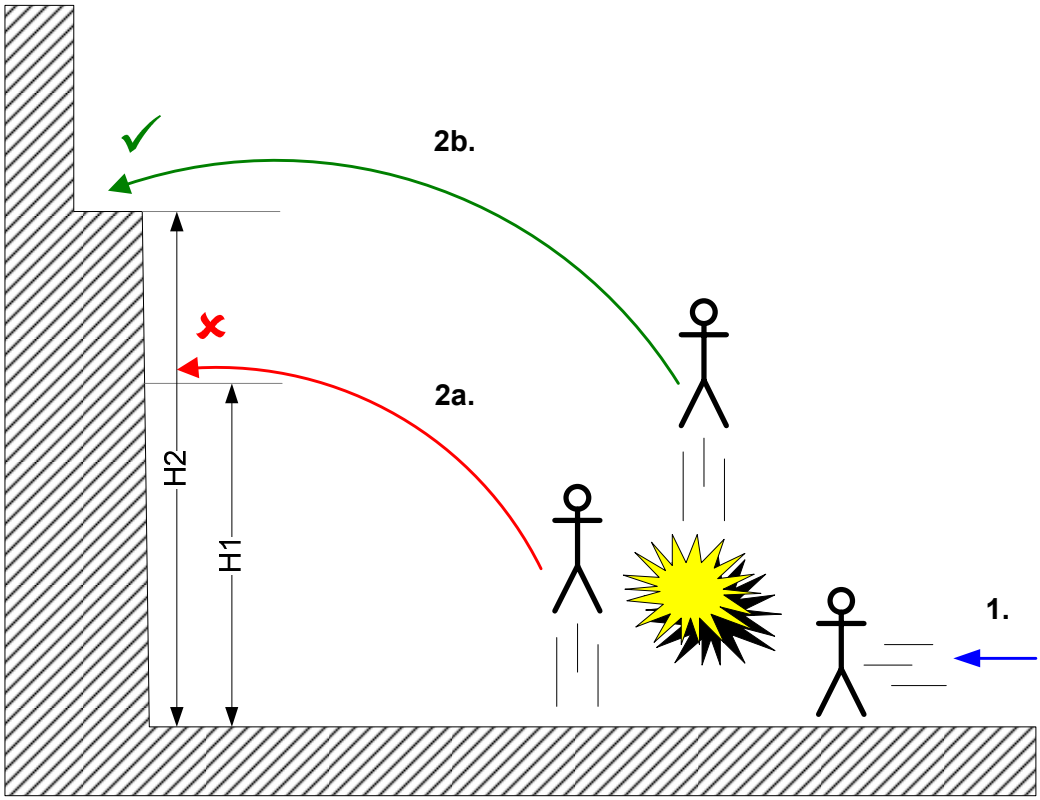


H1: regular forward-jump height
H2: extended forward-jump height (enhanced by the impulse of an explosion)

1. The player-token comes running
2a. The player token performs a forward-jump, insufficient to land on the ledge
2b. The player-token performs a forward-jump, and, right after taking off, it increases the jump height by triggering an explosion, landing on the ledge.

**2.4 Guidelines to sustain and enhance motivation in learning and using mechanics**

To summarize things up, how can we sustain and enhance players' motivation in learning and using game mechanics? By balancing the effort and time required by learning processes, the effort and time spent on using what has been learned, and the payoffs of the usage of the mechanics.

All this leads to a set of simple but very relevant guidelines:

1) Estimate the learning time for each feature of a specific mechanics, and make sure that the time to learn is proportional to player's perceived complexity and relevance of the feature itself.

2) In order to avoid burnout, design the game to allow players using game mechanics as gameplay tools as soon as they feel they've learned them.

3) To further decrease the possibility of burnout, and increase the perceived appeal and relevance of the mechanics, ensure that players will have enough opportunities to use game mechanics' features enhanced through the influence of external factors, achieving otherwise unattainable goals.

4) Always balance time invested in learning with time spent applying what has been learned (and hopefully harvesting well-deserved rewards).

All such guidelines rely explicitly on time. We are not aware of any formal metrics that can help in deciding just how much time should be spent by the player on each game-mechanics related activity. However, over time we came up with a heuristic based on professional experience and empirical observations, which provides fairly relevant indications as to how to balance the durations of game mechanics learning and application processes. Below we propose a version of our heuristics which is simplified but still useful enough to serve as a guideline for game mechanics design.

Figure 2.7. B**alancing learning and application processes**

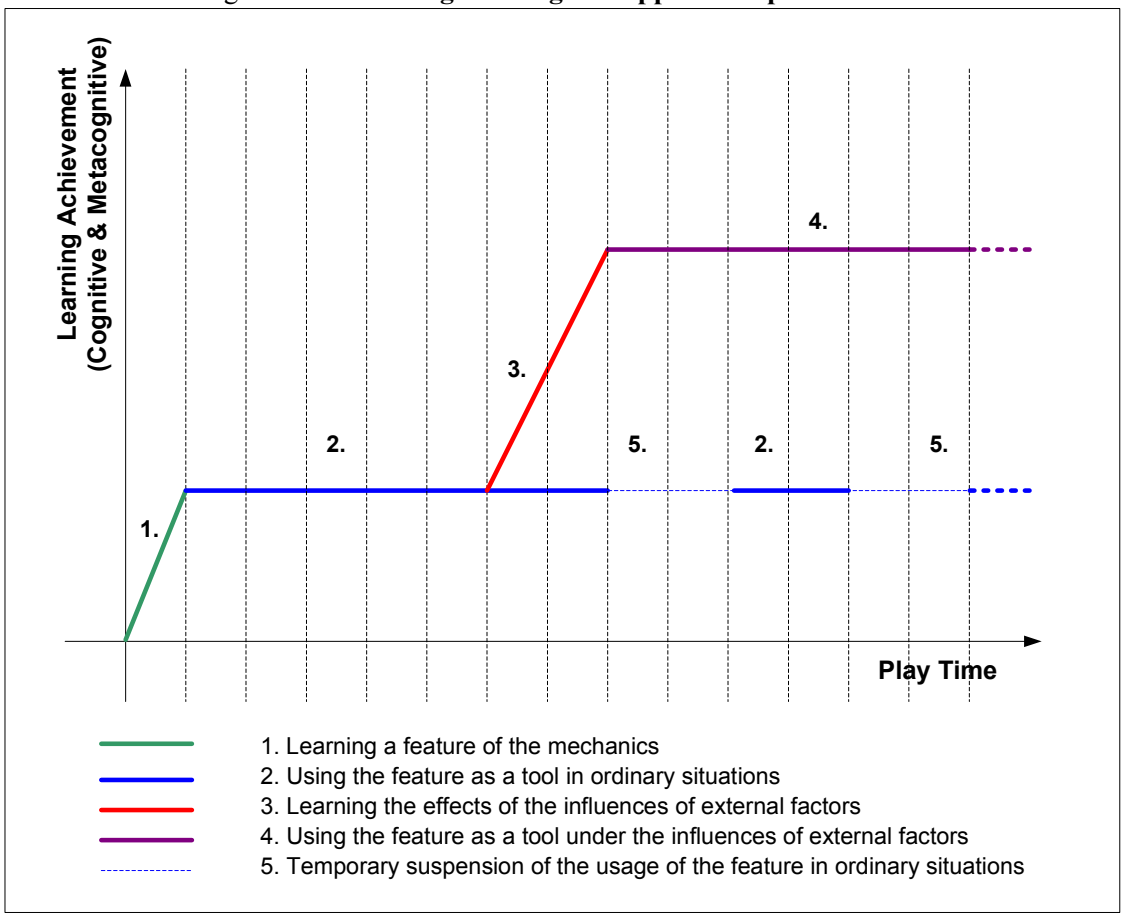


From the chart in figure 2.7, it is evident that, when dealing with a new feature of a mechanics, the player will have to learn how to use it first (segment 1.) The learning time shouldn't be too long, otherwise frustration may arise. After the learning has been completed, the player must be given the opportunity to apply what he learned in ordinary situations, using the feature as it is (segment 2.) This process, in order for it to be meaningful and rewarding, should last at least three times what has been invested in learning. After this, it will be possible to introduce novel stimuli and further sustain motivation by allowing the player to learn how to use the feature under external factors that can modify it (segment 3.) The time spent on this learning should be longer than the time spent on the initial learning (it can safely be twice as long). After

this new learning process, the player should be allowed to get his/her rewards, using the "modified" feature in extra-ordinary situations (segment 4.) This stage should last at least thrice the previous one, before something new related to the feature happens. Notice that the two application processes (segments 2. and 4.) can go on in parallel. In fact, it should always be so, even though some temporary suspension of the usage of the feature should be "forced" by the design from time to time (segment 5.), in order to renew the players' interest in the feature as it is (Berlyne, 1955).

## 3. ARCHITECTING GAMEPLAY

Once understood the importance of game mechanics and how to deal with them in order to sustain players' interest and motivation, another important question arises: are all game mechanics equally important to players? The answer is no. When analyzing gameplay, players implicitly expect to see some sort of hierarchy between game mechanics, based on their importance. It is important to understand this, in order to know where what to put the emphasis on, thus architecting gameplay and game mechanics properly.

### 3.1 Core gameplay and core game mechanics

Players' interactions with a virtual world is mediated by the most important mechanics of any game: the player-token. Such token can be a true avatar, thus representing the embodiment of the player in the virtual world (as it happens in games like Quake and Tomb Raider®[2]), or it can be an "invisible hand" (as it happens in games like Tetris®[3] and Sim City®[4]). In both cases, the player-token receives inputs from the player, and mediates all the attempts of interaction with the rest of the virtual world. The rules that govern the player token determine what the player can do with it, and with the rest of the virtual world through it. In other words, the player-token is the key to what is called "core gameplay" in the game design jargon, and is therefore the most important of all the game mechanics.

Always following a player-centered approach, we can define core gameplay as the set of activities that the player will undertake more frequently during the game experience, and which are indispensable to win the game. The game mechanics which allow carrying out the core gameplay activities are called "core game mechanics", and are, consequently, the most important in the game, since players will have to deal with them during most of their play experience. So, for instance, Quake's core gameplay encompasses all the activities aimed at killing enemies and avoiding being killed, whereas Tetris' core gameplay encompasses activities aimed at fitting blocks into each other. Quake's core mechanics set encompasses the previously discussed locomotion system, whereas Tetris' core mechanics include the control system for blocks.

### 3.2 Core meta-gameplay

Core gameplay can be used to build the so-called core meta-gameplay activities. To the player, these are apparently "new" activities which share much with the core gameplay activities. In fact, they are indeed core gameplay activities, but with new semantics, and don't require any new game mechanics to be carried out.

This can be understood better with an example. Let's consider Super Mario Bros.® [5]: its core gameplay is centered on avoiding enemies, and the locomotion system is the key core mechanics. The jump feature of Super Mario's locomotion system has an important role, since it is used for both avoiding enemies and reaching the end of each scenario. This could have been enough, in terms of game design, to provide some serious fun to gamers. However, Super Mario can actually jump on the heads of his enemies (most of them, at least) killing them. So, killing enemies is perceived by the player as another gameplay activity. However, thinking of it, "killing enemies" is nothing but a disguised version of "jumping". Hence, we can conclude that in Super Mario Bros. killing enemies is a core meta-gameplay activity, since it can be performed by using a core

game mechanics as it is, and gives a new semantics to the act of jumping (a core gameplay activity).

Core meta-gameplay activities are very powerful game design tools, because they can enrich the game broadening the spectrum of activities offered to the player, still requiring very little new learning in order to undertake the new tasks.

### 3.3 Satellite game mechanics

It is possible to enrich the core gameplay (and possibly the core meta-gameplay) without increasing its complexity, by introducing special kinds of mechanics, aimed at enhancing already existing activities. We call these "satellite game mechanics", since their design is functional to already-existing core mechanics. There are three kinds of satellite mechanics: enhancement, alternate and opposition mechanics.

Enhancement mechanics have the purpose of enhancing already-existing core game mechanics. This can be done in two ways: by adding new features to an existing mechanics, or by modifying an existing feature.

In order to add new features to existing mechanics, it is necessary to design what we call add-on (or complementary) enhancement mechanics. For instance, in a war game shooting enemies could be the core gameplay activity, and a rifle could be one of the core mechanics. In this case, at a given moment the player could be allowed to earn a telescopic sight that can be applied to the rifle. This would enhance the rifle mechanics by adding a new feature to it, since, after the acquisition of the sight, the rifle could be used in both regular or sharpshooting mode, with clear differences both in terms of usage of the mechanics, and characteristics and outcomes of the core gameplay activities related to it.

In order to enhance an already existing feature of game mechanics, it is necessary to design what we call power-up enhancement mechanics. These have the sole purpose of changing an existing feature, usually to empower the whole mechanics. A good example of this is the silencer of a gun. It changes a feature of the gun, allowing shooting without being noticed. Another good example is Quake's rocket launcher. As described earlier, it can be used in the game to enhance the jump feature of the locomotion system. This example shows how game mechanics can be designed with polyvalence in mind. In fact, the rocket launcher is definitely a core mechanics, being one of the most powerful weapons available in a combat game. But it is also a power-up mechanics, since it enhances a feature of another core mechanics (the jump).

The play experience can be further enriched by offering to players different ways of doing the same things, giving to them the chance of carrying out the same activity using different mechanics. In this case, alternate mechanics are in order. Their purpose is offering to the player alternatives to existing core mechanics (or related features). Thus, true alternate mechanics require new learning, a price that many players are willing to pay if that allows tackling activities in new ways.

Finally, opposition mechanics are a powerful means of enhancing the challenge in a game. Their main purpose is hindering the player's progress. Thus, they are a very peculiar type of gameplay tools, since players learning is not aimed at understanding their working in order to use them, but rather in order to avoid or circumvent them. Of course, polyvalence indicates that some of them could also be used against enemies, thus being proper tools.

### 3.4 An architectural model for game mechanics

Enhancement mechanics literally sit on top of core game mechanics, since they are designed strictly based on core mechanics' features, as if they were extensions to them. On the contrary, alternate mechanics sit aside core mechanics. In fact, their design refers to the core mechanics only to ensure that they allow doing the same things, but in truly different ways. Opposition mechanics sit on top of all the other, since, due to their role, they should be designed according to

the inner workings of the rest of the mechanics. This leads to the architectural model proposed in figure 3.1.

Figure 3.1. **An architectural model for game mechanics**

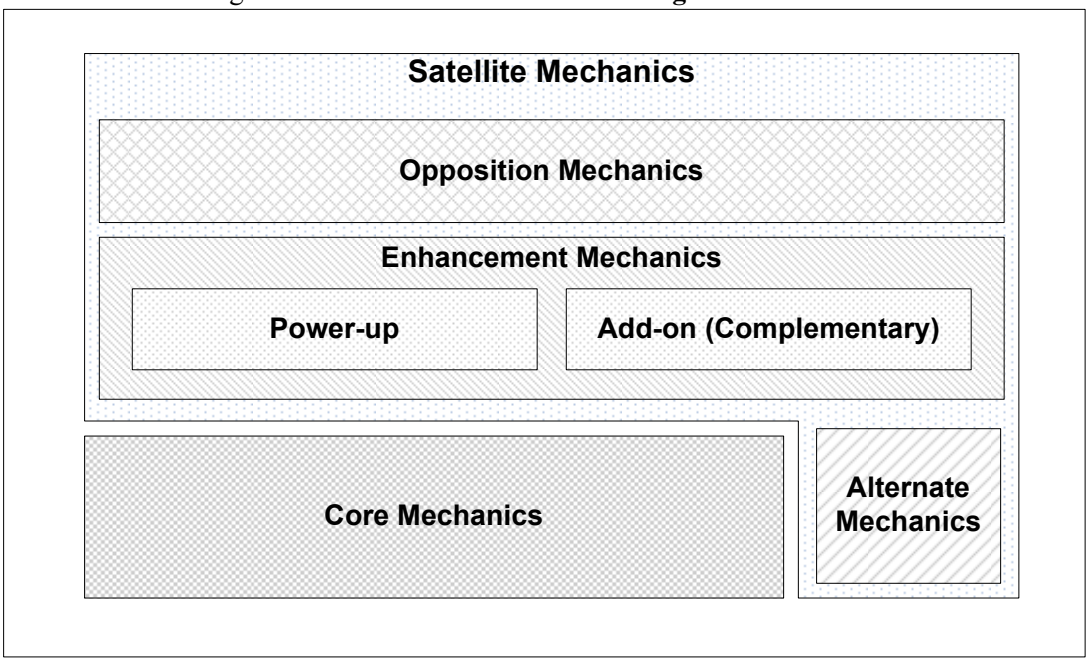


Notice that enhancement mechanics sit on top of alternate mechanics as well. This is because a good design should also consider the possibility of providing enhancements to alternate mechanics.

The architecture hints that good gameplay can be completely built based on a handful of good core mechanics. In fact, a thoughtful design can lead to a simple but yet rich gameplay, consisting of few core activities based on a limited set of chore mechanics, but with very many variations introduced through all kinds of satellite mechanics. We found that players are very keen on this kind of gameplay, since it allows a continuous development of mastery, still regularly introducing elements of novelty that enhance the challenge and sustain the motivation in playing the game.

### 3.5 Peripheral gameplay

Core gameplay and meta-gameplay activities can be more than enough to provide an entailing play experience. However, sometimes the context of the game requires designers to go beyond those two categories of gameplay activities.

For instance, consider a typical point-and-click adventure game. In such games the core gameplay is usually centered on exploration, puzzle-solving and dialog activities. Suppose that, at a given moment, the plot requires the protagonist to row a canoe through a swamp. Furthermore, the poor fellow will have to avoid dangerous crocodiles. That might as well be the only time in the whole game that the player is required to row a canoe and avoid crocodiles. New activity, new learning, probably not functionally indispensable (in the sense that there might have been other ways of designing the activity to achieve the same goal), but yet a new piece of gameplay is there, with all the related mechanics.

This usually happens because the plot and the setting of the game require a radical although temporary change in the gameplay, for the sake of realism. Very often, though, this might be the result of whimsical design decisions, seeking the “ultimate” gameplay enrichment… Whatever

the reason, in such cases the player will face a radical although temporary change in the gameplay. It could be so radical as to give the sensation that, for a while, the core gameplay has changed completely, since the core activities that must be performed have nothing to do with the "real" core gameplay.

We define peripheral gameplay the category encompassing all those activities which require completely new mechanics (neither relying on core mechanics nor on satellite mechanics), and which temporarily substitute the core gameplay at a given stage of the game experience.

Peripheral gameplay is expensive, since it introduces new activities and requires the creation of totally new game mechanics, consequently demanding to the player new learning, and disrupting his progress in mastering the core gameplay. Therefore, in our opinion it must be tackled with caution, and avoided whenever possible.

### 3.6 Guidelines for gameplay design

From the analysis presented in the previous section stems the following set of gameplay design guidelines:

1) Minimize the learning time required to master core mechanics' features.
2) Minimize the number of core mechanics, and the amount of features for each one of them.
3) Make sure that all core mechanics are relevant throughout most of the game, and that there are no functional redundancies amongst them.
4) Exploit polyvalence in game mechanics design.
5) Exploit satellite mechanics in order to sustain and enhance players' motivation in using core mechanics.
6) Suspend temporarily the use of specific mechanics in order to renew players' interest in them.
7) Build the gameplay mostly based on core gameplay and core meta-gameplay activities, providing through them the doses of challenge, mastership and reward that players seek.
8) Minimize the use of peripheral gameplay.

## 7. CONCLUSIONS

Gameplay is the most important pillar of the game design activity. A handful of good core mechanics and some carefully thought satellite mechanics allow creating games with simple but yet rich and entailing gameplay, capable of providing to players the challenge, mastery and reward that they seek, without unnecessary difficulties, thus sustaining and enhancing their motivation.

In fact, the combination of core and satellite mechanics permits having a limited number of gameplay activities with many variations for each one of them. This allows players to feel a continuous evolution and development of mastery in all the core gameplay activities. At the same time, the slight variations introduced through satellite mechanics provide those elements of novelty indispensable to constantly enhance the challenge, refresh the game experience and sustain players' motivation in playing the game.

The benefits of this approach are not limited to the effects on players' motivation. Focusing on a restrained set of core mechanics and building most of the gameplay upon it allows increasing the efficiency of the whole development process, minimizing the requirements for new resources and maximizing the possibility of thoroughly testing and balancing all the mechanics and the related activities.

All this leads to a simple but very relevant conclusion: game designers should be in first place skilled and sensitive toy-makers, capable of building a comprehensive but yet parsimonious set of core and satellite mechanics. And then, they should be architects capable of building apparently-complex gameplay structures with as few toys as possible.

# BIBLIOGRAPHY


Bates, B. (2001), *Game Design: the Art and Business of Creating Games*, Prima Publishing, Rocklin.

Berlyne, D.E. (1950), "Novelty and curiosity as determiners of exploratory behavior", *British Journal of Medical Psychology*, No. 41.

Berlyne, D. E. (1955), "The arousal and satiation of perceptual curiosity in the rat", *British Journal of Medical Psychology*, No. 48.

Bruner, J. S. (1972), "Nature and uses of immaturity", *American Psychologist*, Vol. 27, No. 8,. In Bruner, J. S., Jolly, A. and Sylva, K. (eds.) (1976), *Play. Its role in development and evolution*. Penguin Books, New York.

Bruner, J. S. and Sherwood, V. (1976). "Peekaboo and the learning of the rule structures". In Bruner, J. S., Jolly, A. and Sylva, K. (eds.) (1976), *Play. Its role in development and evolution*. Penguin Books, New York.

Cook, D. (2006), *What are game mechanics?*
Available from: http://lostgarden.com/2006_10_01_archive.html
[cited 9 August 2007].

Crawford, C. (1984), *The Art of Computer Game Design*, Osborne/McGraw-Hill, Berkley.
Available from: http://www.erasmatazz.com/Library.html.
[cited 9 August 2007].

Crawford, C. (2003), *On Game Design*, New Riders Publishing, Indianapolis.

Fabricatore, C. (1999), Playability in Action Videogames: a Theoretical Design Reference, Ph. D. Catholic University of Chile.

Fabricatore, C., Nussbaum, M. and Rosas, R. (2002), "Playability in Action Videogames: A Qualitative Design Model", Human-Computer Interaction, 17 (4).

Fowler, M. (2003), *UML Distilled: A Brief Guide to the Standard Object Modeling Language, Third Edition*, Addison-Wesley, Reading.

Hutt, C. (1966), "Exploration and play in children", *Symposia of the Zoological Society of London*, No. 18. In Bruner, J. S., Jolly, A. and Sylva, K. (eds.) (1976), *Play. Its role in development and evolution*, Penguin Books, New York.

Kotler, P. (1993), *Marketing management, analysis, planning, implementation, & control*, Prentice Hall, Englewood Cliffs.

Lewinski, J. S. (1999), *Developer's Guide to Computer Game Design*, Wordware Publishing, Inc., Plano.

Malone, T. W. (1981a), "What Makes Computer Games Fun?", *Byte*, No. 6.

Malone, T. W. (1981b), "Toward a theory of intrinsically motivated instruction", *Cognitive Science*, No. 4.

Malone, T. W. and Lepper, M. R. (1987), "Making learning fun: A taxonomy of intrinsic motivations for learning". In R. E. Snow & M. J. Farr (eds.) (1987), *Aptitude, learning, and instruction, III: Conative and affective process analysis*, Lawrence Erlbaum Associates, Killsdale.

Pedersen, R. E. (2003), *Game Design Foundations*, Wordware Publishing, Inc., Plano.

Rouse III, R. (2001), *Game Design Theory and Practice*, Wordware Publishing, Inc., Plano.

Rollings, A. and Adams, E. (2003), *on Game Design*, New Riders Publishing, Indianapolis.

## ENDNOTES

[1] Quake is a registered trademark of Id Software.
[2] Tomb Raider is a registered trademark of Eidos P.I.C.
[3] Tetris is a registered trademark of The Tetris Company LLC.
[4] Sim City is a registered trademark of Maxis.
[5] Take Super Mario Bros. is a registered trademark of Nintendo.

## CONTACTS

CARLO FABRICATORE

Via F. De Grenet 145/D1
00128 – Rome
ITALY (IT)

e-mail: carlo.fabricatore@initium-studios.com

Mobile: +39 349 41 76 780
Fax: +39 06 97 25 05 43